KARTSANA

Life-moving innovation

C/ Narcís Monturiol, 34
08192 Sant Quirze del Vallès
BARCELONA
TEL. 93 714-49-24
ventas@kartsana.com
www.kartsana.com

Brava **Series**

ELECTRIC STRETCHER BRAVA

Model TG-1000

INSTRUCTIONS MANUAL

Read these maintenance instructions before using the product and keep them for future references.

TÜV SÜD

CERTIFIED 10G EN-1789

CE

CONTENT

1. INTRODUCTION

1.1. Foreword

The BRAVA (TG-1000) stretcher has been solely designed to rescue and transport patients. The product complies with the directive MDR (EU) 2017/745. It is an electric-hydraulic model that allows the height to be adjusted according to different needs, with just two buttons. Manual operation is possible when potential faults in the automated system occur.

The BRAVA stretcher model must be joined to the ambulance using the KARTSANA BRAVO rail.
This stretcher has been tested according to the regulation UNE-EN 1789.

All information regarding treatment, disinfection and maintenance is indicated, taking into consideration our current experience and know-how.
We reserve the right to change the specifications of the stretcher to improve the products.

BRAVA information sticker

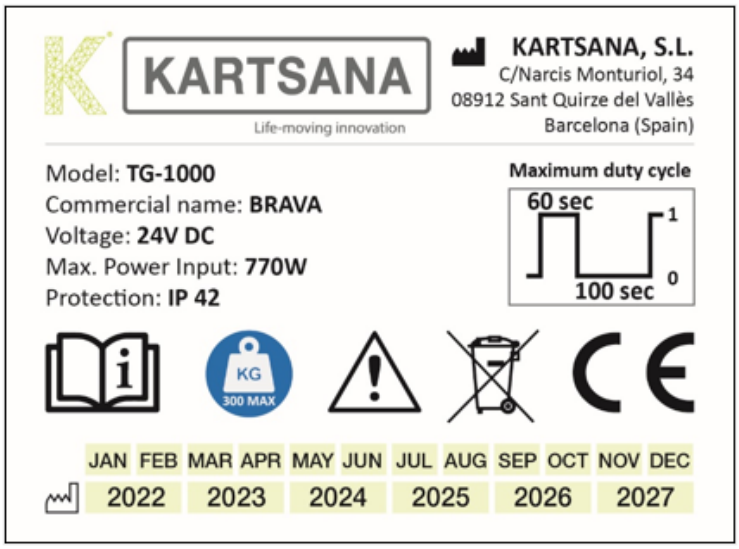

Read the instructions before using.

Maximum load 300 Kg

Warnings and safety instructions

Maximum duty cycle.

60 sec – operating maximum time.

100 sec. – Idle time.

- Do not throw away. Send to recycling center.
- Packing should be manage as a reusable refuse.
- Metals should be treated as old metal.
- Plastic product should be treated as recycling material.
- Waste management must be as regulation of the country.
- Ask municipal administration about recycling and refuse.

1.2. Intended use of product

The BRAVA (TG-1000) is a powered stretcher, which is intended to support and transport the entire body of human patient. The battery-powered electro-hydraulic lift system is intended to help reduce the effort required by the operator to raise and lower the stretcher. The device is designed to support patients in horizontal position or sitting position and facilitate the transportation of medical equipment in emergency transport vehicles.

This ambulance stretcher is rated to a maximum capacity of 300Kg, and the intended operators of the device are trained professionals including emergency medical service and medical care center personnel, as well as medical first responders.

Ambulance stretchers are intended for transportation purposes. They are not intended for extended stay or to be used as hospital beds. They are also not intended to be used in devices which modify air pressure, such as hyperbaric chambers.

1.3. Responsibility and warranty

The stretcher must be checked at the time of its delivery to the rescue organisation. All its functions must be explained in detail. The assistance organisation must take charge of teaching all its employees how to use it correctly.

The product has a 24-months warranty from the delivery date to the end user.

The warranty does not cover defects resulting from incorrect installation, misuse, or improper use of the stretcher. All repairs must be made by a technical service authorised by Kartsana or its respective representative.

The manufacturer will not be liable for any anomaly caused to the stretcher because of using products other than those provided by Kartsana.

Changes or modifications to the unit not expressly approved by Kartsana could void the user's authority to operate the system.

1.4. Specifications

Maximum unassisted load	300Kg
Standards	UNE-EN-1865-2 EN-1789+A1 UNE-EN 60601-1 / UNE-EN 61000-6 UL-1642
Backrest Articulation/Shock Position	De 0º a 80º
Footrest Articulation/Shock Position	Double articulation
Wheels diameter	160mm
Total Length [1]	1970mm

Total Width	564mm
Maximum and minimum height [2]	350mm-1185mm
Loading Height [3]	Max. 1030mm
Recommended operatives required to load / unload an occupied stretcher	1 operative, or 2 if the stretcher were occupied by a larger sized patient.
Recommended/Compatible fixation system	Rail Bravo1 - Rail Bravo2

[1]Total length could be shortened to1607mm (with the extensible back frame to the minimum position and the backrest folded to 80º - position used in maneuvers with little space, elevators, etc.)
[2]Heigt measured from ground level to main structure of the patient area.
[3]For weights higher than 250kg it recommended to use the stretcher by a low position in patient transport, rising the stretcher until the necessary position just in the moment of introduce it into the ambulance.
Kartsana reserves the right to change specifications without notice.

1.5. Attention

Through this sign, information is furnished on important safety measures for the correct use of the stretcher, to prevent accidents. The **warnings** alert the reader about a situation which, if not avoided, could result in death or serious injury. The **cautions** alert the reader of a potentially hazardous situation which, if not avoided, may result in minor or moderate injury to the user or patient or damage to the equipment or other property. This includes special care necessary for the safe and effective use of the device and the care necessary to avoid damage to a device that may occur because of use or misuse.

1.6. Summary of safety precautions

Carefully read and strictly follow the warnings and cautions listed on these pages. Service only by qualified personnel.

WARNINGS:

- Improper usage of the stretcher can cause injury to the patient or operator. Operate the stretcher only as described in this manual.

- Do not modify the stretcher or any components of the stretcher. Modifying the product can cause unpredictable operation resulting in injury to the patient or operator. Modifying the product also voids its warranty.

- Any emergency vehicle to be used with this stretcher must have the compatible fixation system installed.

- Do not attempt to operate the stretcher when it is loaded into a stretcher fastener.

- Have the vehicle safety rail compatible installed by a certified mechanic. Improper rail installation can cause injury to the patient or operator and/or damage to the stretcher. Verify that the stretcher legs lock into the load position before without contact with the fender of the vehicle. Failure to properly lock the stretcher height into position can cause injury to the patient or operator and/or damage to the stretcher

- To avoid risk of electric shock, never attempt to open the battery pack for any reason. If the battery pack case is cracked or damaged, do not insert it into the charger. Return damaged battery packs to a service centre.

- Do not remove the battery when the stretcher is activated.

- Avoid direct contact with a wet battery or battery enclosure. Contact may cause injury to the patient or operator

- Inspect batteries for damage before every use.

- Practice changing height positions and loading the stretcher until operation of the product is fully understood. Improper use can cause injury.

-Do not allow untrained assistants to assist in the operation of the stretcher. Untrained technicians/assistants can cause injury to the patient or themselves.

- Do not ride on the base of the stretcher. Damage to the product could occur, resulting in injury to the patient or operator.

- Transporting the stretcher sideways can cause the stretcher to tip, resulting in possible damage to the product and/or injury to the patient or operator. Transporting the stretcher in a lowered position, head, or foot end first, minimizes the potential of a stretcher tip.

- Grasping the stretcher improperly can cause injury. Keep hands, fingers, and feet away from moving parts. To avoid injury, use extreme caution when placing your hands and feet near the base tubes while raising and lowering the stretcher.

- Always use all restraint straps to secure the patient on the stretcher. An unrestrained patient may fall from the stretcher and be injured.

- Never leave a patient unattended on the stretcher or injury could result. Hold the stretcher securely while a patient is on the product.

- Never apply the optional wheel lock(s) while a patient is on the stretcher. Tipping could occur if the stretcher is moved while the wheel lock is applied, resulting in injury to the patient or operator and/or damage to the stretcher.

- Siderails are not intended to serve as a patient restraint device.

- Hydraulically raising or lowering the stretcher may temporarily affect electronic patient monitoring equipment. For best results, patient monitoring should be conducted when the stretcher is idle.

- High obstacles such as curbing, steps or rough terrain can cause the stretcher to tip, possibly causing injury to the patient or operator.

- The BRAVA TG-1000 stretcher is designed to be compatible with Bravo Rail and is operator responsibility that these products work together.

- Transporting the stretcher in lower positions reduces the potential of a stretcher tip. If possible, obtain additional assistance or take an alternate route.

- We recommended two operators required when the stretcher is occupied by a larger sized patient.

- Operators must be able to lift the total weight of the patient, stretcher, and any items on the stretcher.

- Never install or use a wheel lock on a stretcher with excessively worn wheels. Installing or using a wheel lock on a wheel with less than a 160mm diameter could compromise the holding ability of the wheel lock, possibly resulting in injury to the patient or operator and/or damage to the stretcher or other equipment.

- When cleaning, use any appropriate personal safety equipment (goggles, respirator, etc.) to avoid the risk of inhaling contagion.

- Some cleaning products are corrosive in nature and may cause damage to the product if used improperly. If the products described above are used to clean Kartsana equipment, measures must be taken to ensure the stretchers are wiped with clean water and thoroughly dried following cleaning. Failure to properly rinse and dry the stretchers will leave a corrosive residue on the surface of the stretchers, possibly causing premature corrosion of critical components.

- Failure to properly clean or dispose of contaminated mattress or other stretcher components will increase the risk of bloodborne pathogens and may cause injury to the patient or operator.

- Escaping fluid under pressure can penetrate the skin causing serious injury. Avoid the hazard by relieving pressure before disconnecting hydraulic or other lines. Tighten all connections before applying pressure. If an accident occurs, see a doctor immediately. Any fluid injected into the skin must be surgically removed within a few hours or gangrene may result. Doctors unfamiliar with this type of injury should reference a knowledgeable medical source.

- To avoid the risk of injury, do not use bare hands to check for hydraulic leaks.

- Take special precautions regarding electromagnetic compatibility (EMC) when using medical electrical equipment like Brava TG-1000 stretcher. Portable and mobile RF communications equipment can affect the function of the stretcher.

- The use of accessories, transducers, and cables other than those specified, except for transducers and cables sold by Kartsana as replacement parts for internal components may result in increased emissions or decreased immunity of the TG-1000 BRAVA stretcher.

CAUTIONS:

- Changes or modifications to the unit not expressly approved by Kartsana could void the user's authority to operate the system.

- The stretcher can be set at any stretcher load height position. Establish the required stretcher load height before placing the stretcher into service

- Set the stretcher load height to the proper stop height prior to operation.

- Installation of the safety hook should be done by a certified mechanic familiar with ambulance vehicle construction. Consult the vehicle manufacturer before installing the safety hook and be sure that the installation of the safety hook does not damage or interfere with the brake lines, oxygen lines, fuel lines, fuel tank or electrical wiring of the vehicle.

- Only use the battery and charger as specified in this Instruction Manual.

- The stretcher is not for use with an AC adapter.

- When charging a battery in an ambulance, locate the charger in an enclosed cabinet and out of patient reach during transport.

- Ensure that the battery is fully charged prior to placing into service. An uncharged or depleted battery may cause poor stretcher performance.

- Before operating the stretcher, clear any obstacles that may interfere and cause injury to the operator or patient.

- When unloading the stretcher from the patient compartment, ensure that the caster wheels are safely set on the ground or damage to the product may occur.

- Remove the battery if the stretcher is not going to be used for an extended period (more than 24 hours).

- Wheel lock(s) are only intended to help prevent the stretcher from rolling while unattended and to aid in patient transfer. A wheel lock may not provide sufficient resistance on all surfaces or under loads.

- Ensure that the restraints are not entangled in the base frame when raising and lowering the stretcher.

- Do not store items under the stretcher mattress. Storing items under the mattress can interfere with the operation of the stretcher.

- Do not steam clean or ultrasonically clean the unit.

- Maximum water temperature should not exceed 80°C.

- Allow stretcher to air dry.

- Towel dry all casters and interface points.

- Failure to comply with these instructions may invalidate any/all warranties.

- Always remove the battery before washing the stretcher.

- For additional maintenance information, see the preventative maintenance information.

- Improper maintenance can cause injury or damage to the product. Maintain the stretcher as described in this manual. Use only Kartsana approved parts and maintenance procedures. Using unapproved parts and procedures could cause unpredictable operation and/or injury and will void the product warranty

- Failure to use authorized parts, lubricants, etc. could cause damage to the stretcher and will void the warranty of the product.

- Hydraulic lines, hoses, and connections can fail or loosen due to physical damage, kinks, age, and environment exposure. Check hoses and lines regularly to avoid damage to the stretcher. Check and tighten loose connections.

NOTES:

- Loose items or debris on the patient compartment floor can interfere with the operation of the safety hook and stretcher fastener. Keep the patient compartment floor clear

- This manual should be considered a permanent part of the stretcher and should remain with the product even if the stretcher is subsequently sold.

- Kartsana continually seeks advancements in product design and quality. Therefore, while this manual contains the most current product information available at the time of printing, there may be minor discrepancies between your stretcher and this manual

- Kartsana recommends that, prior to installation, the certified mechanic plan the placement of the safety hook in the rear of the vehicle.

- Automatic charging will only occur with the batteries. Pack batteries supplied by Kartsana.

- Only use Kartsana-approved batteries with Bravo rail.

- Batteries slowly lose power when not on the charger.

2. INSTRUCTION MANUAL

2.1. Technical specifications BRAVA stretcher

(*) Make sure that no damage is caused to the areas containing the stretcher mechanisms, to prevent them from malfunctioning.

Stretcher weight 69 kg

Trolley dimensions: Elevation in mm

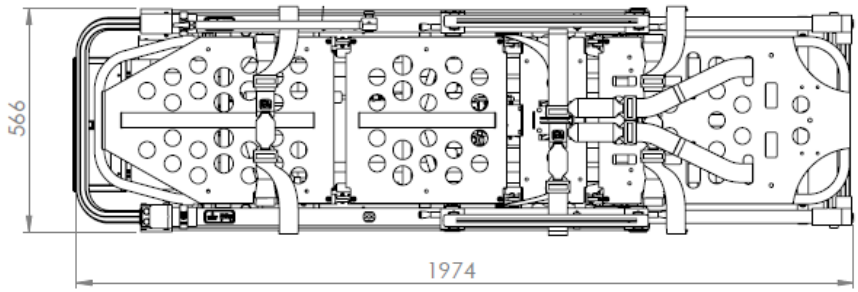

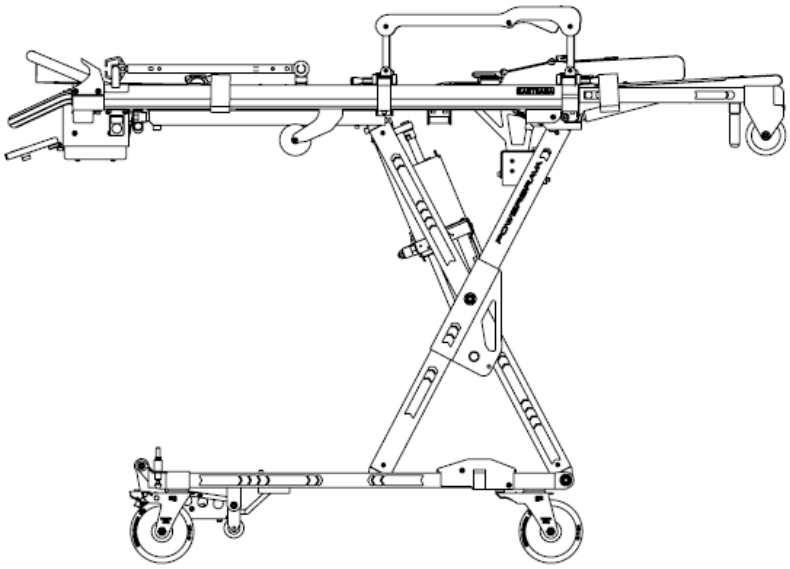

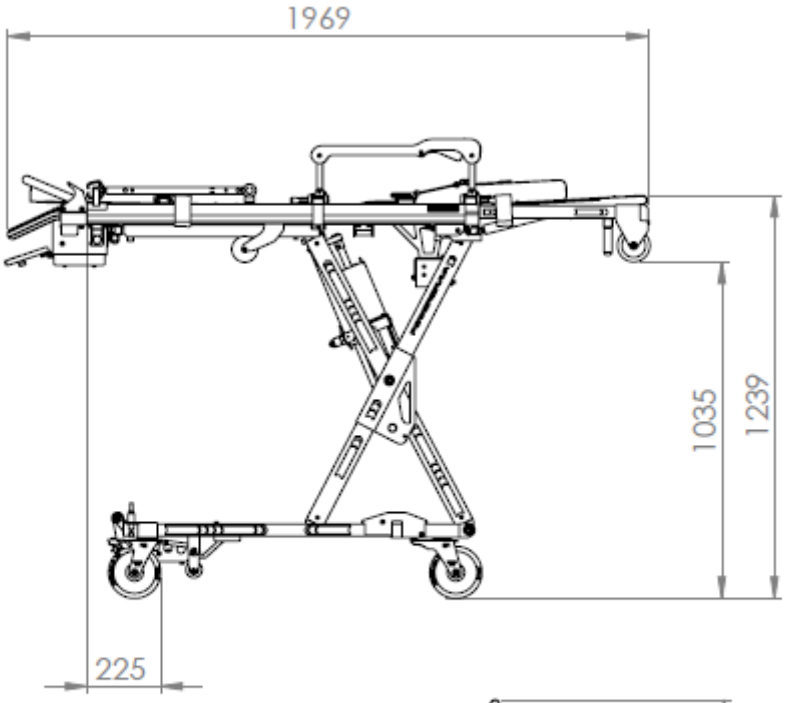

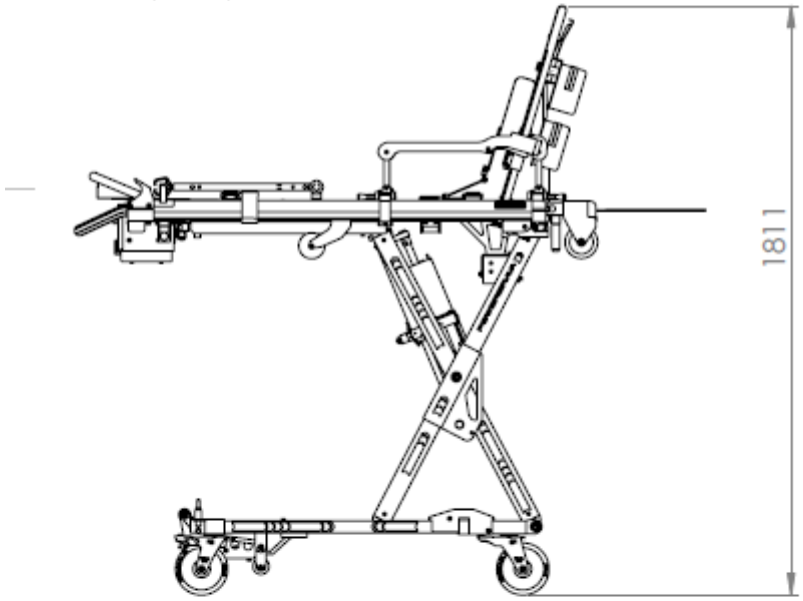

FOLDED LEGS

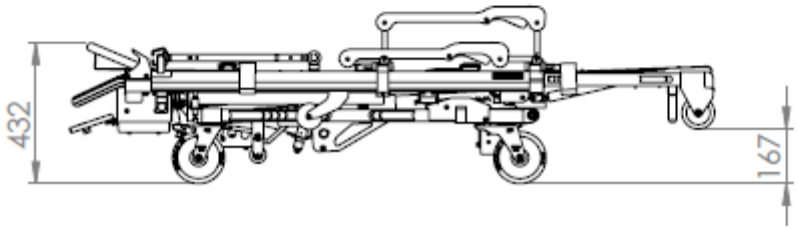

2.2. Vehicle's configuration

This installing instruction are recommended for the fixation of the assembly BRAVA - BRAVO (stretcher + rail) of Kartsana. The correct installation of the fastening system (rail) is providential for the appropriate use of the joint.

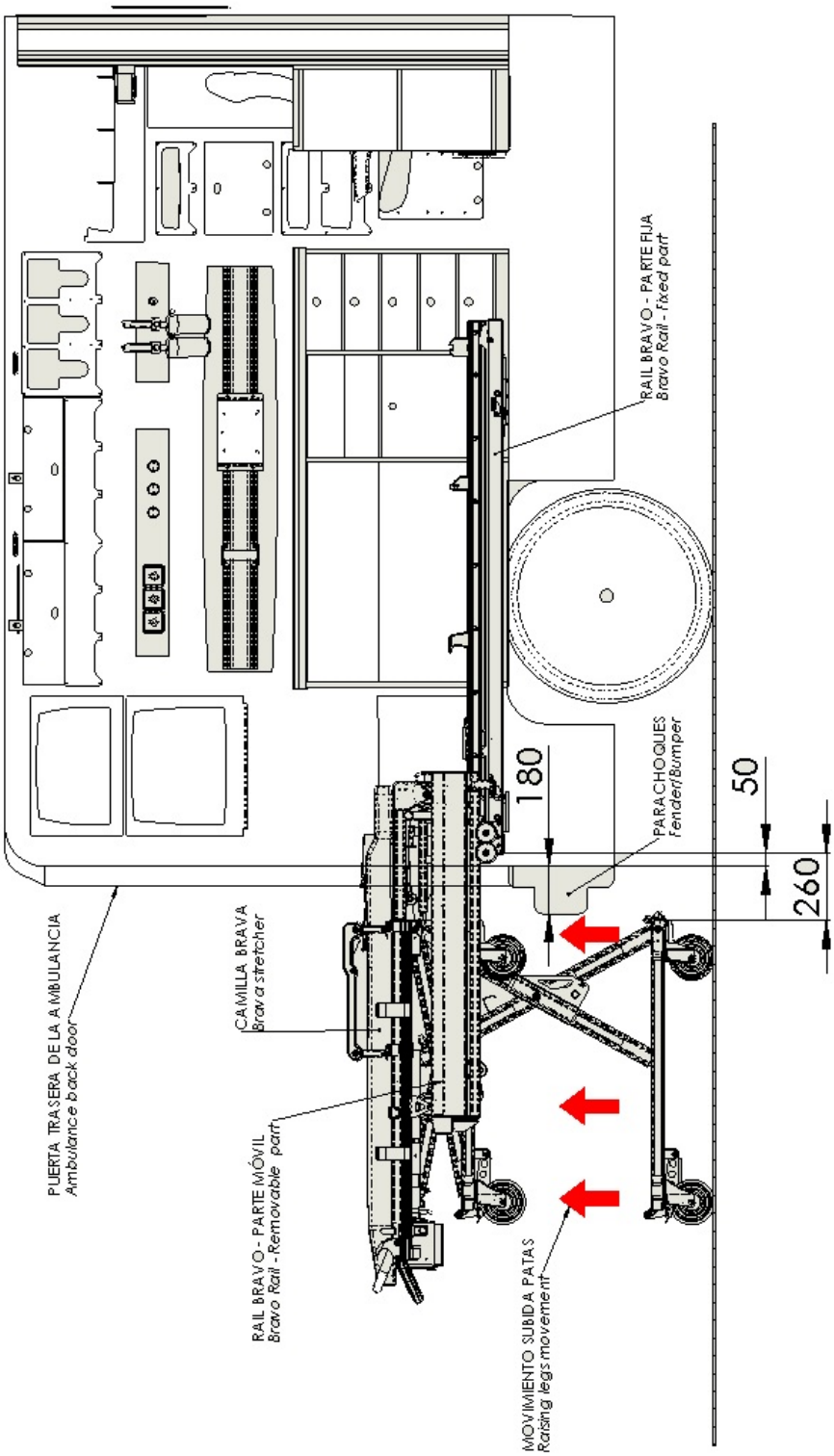

You have to screw the fixed part of the rail to a maximum distance of 50mm from the backdoor of the ambulance (from the stainless steel base of the Bravo).

We must take into account the distance / type of fender that the ambulance has, so if the fender protrudes more than 180mm we will have to adapt it to allow proper rise of the legs of the stretcher.

Depending on the model of ambulance and the type of rear bumper fixing measures may vary and / or adapt.

2.3. Operating and handling the stretcher

2.3.1. Installing the battery

The first step when working with BRAVA is to install the two 24 V batteries which power the system. To do this, we open the rear black cover and place the batteries opposite their housings at the back of the stretcher and push until it locks.

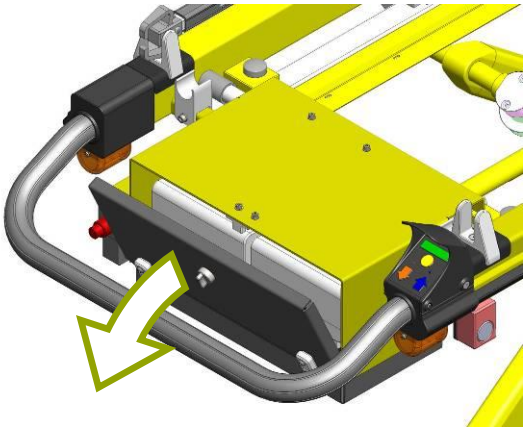

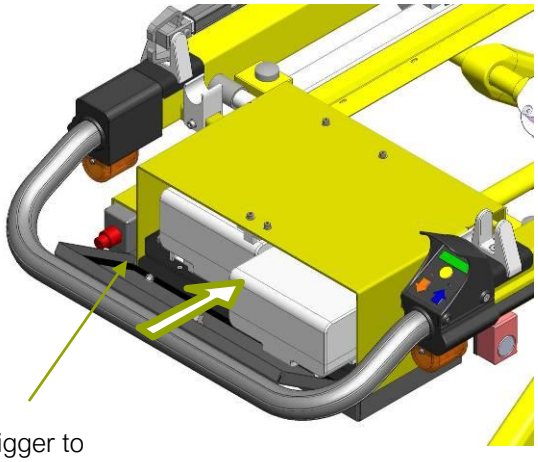

Trigger to
remove battery

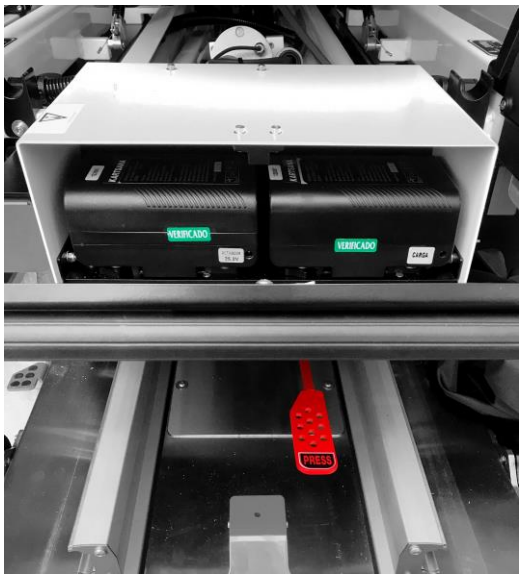

To remove each of the batteries, press the small trigger located on the lower left-hand side and pull carefully. Both batteries work independently of each other. The system will run down the first battery and then start to work with the second.

Each battery life under normal circumstances (from 80 to 120 kg load) should be about 20 cycles. When one of the battery approaches discharge the system will use the second battery.

Information note*:* The front part of the stretcher corresponds to the head part.

Batteries are delivered with a minimum charge. Prior to operating the bed, please, charge the batteries with the charger supplied, until the LED turns green it. After that we can work normally.

In order to be able to charge the batteries outside the ambulance, it is included with the stretcher, its specifical charger.

2.3.2. Starting and controlling the stretcher.

To avoid potential injury to the patient and companions, do not place objects in the way of the moveable parts of the stretcher. It is also recommended to avoid having objects that stick out the ambulance.

The stretcher has a security system to avoid collapse in the case of system failure.

To start the system, we must press the yellow button on the control panel for 2 seconds.

The control panel leds will turn on. Afterwards, we will be able to manoeuvre just with the orange button (to lower stretcher) and with the blue button (to raise stretcher). From then on, if we press the yellow button again the amber emergency lights at the four ends of the bed will turn on (see emergency lights photo). We should also see the two-battery level LEDs lit up. The upper line of lights shows the voltage level of battery 1 whilst the lower line shows that of battery 2.

If the level lights are in the green area, the charge level is high, this is the optimum level to carry out the manoeuvres necessary. If they are at the orange level this shows that they are half charged and if they show red, we are being warned that we must recharge the batteries as they may soon stop working due to the low voltage level.

Once both batteries have been installed the system will be powered by battery 1, when this runs down, the system will automatically switch to battery 2. Both will recharge when the stretcher is on the rail and inside the ambulance.

The level screen also shows us any possible system errors. In the following table we will show all the incidences that the display can show.

FAILATURE MESSAGE	CODE	LEDS								
		R	R	Y	Y	Y	G	G	G	G
Load tension error (ambulance entrance) VERY LOW	2								ON	
Load intensity error VERY HIGH	3								ON	ON
Error in battery charge due to lack of ambulance tension or connection switch	4							ON		
End of battery charge (by Vmax or time)	5							ON		ON
Charge error due to connector	6							ON	ON	
Charge error due to low battery.	7							ON	ON	ON
Charge error due to exceeding the maximum PWM duty cycle	8						ON			
Upwards movement error due to excess time.	9						ON			ON
Downwards movement error due to excess time.	10						ON		ON	
Engine failure due to exceeding maximum intensity.	11						ON		ON	ON
Engine failure due to low tension.	12						ON	ON		

TROUBLESHOOTING			
COD	DESCRIPTION OF ERROR	POSSIBLE CAUSE OF ERROR	SOLUTION
2	The battery Voltage is below 3V. The battery or batteries are disconnected or damaged.	Battery(ies) disconnected	Connect the batteries correctly in the dock.
			Check that the battery cables are securely connected to the circuit board.
		Damaged battery(ies)	Replace with new battery(ies)
3	The battery Voltage is above 34V	An overload occurred while the battery was recharging. (ONLY use the charger supplied by KARTSANA or the stretcher for recharging the batteries.)	Leave the battery disconnected, preferably in a cool place for 3 or 4 hours (or until it does not show error 3 when connected to the stretcher) for it to discharge. Check that the batteries have not suffered internal damage while discharging caused by stretcher raising and lowering movements. It must perform at least 15 cycles before discharging.
		Damaged battery(ies)	Replace with new battery(ies)
4	The stretcher does not receive voltage from the ambulance.	The stretcher-rail plug does not connect properly	Check that the two prongs of the stretcher plug and the rail are touching, and that no foreign objects are between them.
		The ambulance battery is discharged or damaged.	Charge battery or replace with a new one respectively.
		Power cables incorrectly connected to either the ambulance, rail or stretcher.	Check cable connections. Recommended checking order: ambulance, rail and stretcher
		One of the copper prongs on the stretcher plug has not come completely out of its housing in the plastic part.	Check that the plug prongs gently go in and out of their housing.
5	The Voltage of the two batteries is below 18V.	Batteries discharged	Charge batteries
6	The stretcher is receiving voltage through the plug, but the copper prongs have not been pressed in.	The stretcher is not fully inserted in the rail.	Position it correctly on the inside of the rail.
7	No batteries detected	Batteries disconnected	Fully insert them in the fastening plate until you hear a click.
		Battery(ies) damaged	Replace with new battery(ies)
		Batteries very low	Charge using the external charger
8	Failure in recharging process	Contact technical support	Contact technical support
9	More than 22 seconds have elapsed in the upward movement	Discharged battery(ies)	Charge battery(ies)
		Failure in hydraulic system	Contact technical support
		The mechanism does not move freely	Check mechanism in search of some excessive friction or interference between parts

10	More than 22 seconds have elapsed in the downward movement	Discharged battery(ies)	Charge battery(ies)
		Failure in hydraulic system	Check for possible oil leaks. Contact technical support
		The mechanism does not move freely	Check mechanism in search of some excessive friction or interference between parts
11	Intensity greater than 48A	Stretcher overloaded	Do not load the stretcher with more than 300 kg.
		Discharged battery(ies)	Charge battery(ies)
		The mechanism does not move freely	Check mechanisms in search of any excessive friction, blocking or interference between parts.
12	Voltage lower than 15V	Stretcher overloaded	Do not load the stretcher with more than 300 kg.
		Discharged battery(ies)	Charge battery(ies)
		The mechanism does not move freely	Check mechanisms in search of any excessive friction, blocking or interference between parts.

After any fault or incident, we must restart the system pressing the three keys at the same time for 1 seconds.

The system will automatically go on STAND-BY if more than 15 minutes pass without any action being carried out. It will restart by pressing the yellow button for 2 seconds.

If we perform continuous stretcher raising and lowering movements for 2 min., we should then stop for 10 sec. for the system to recover and we can continue operating without problems.

Removing both batteries is advised if the stretcher will remain unused for long periods of time.

2.3.3. Adjustable reclining head

Pull the red lever that is located below the head rest and move it to the required position.

Then release the lever so that the head is locked in the required position.

2.3.4. Extendable back rest frame.

Before carrying out this action the back rest must be put at its most upright position.

To extract or fold up the telescopic back rest frame, you must pull one of the two red triggers located on each side of the stretcher. Stretching or pressing the back rest frame at the same time.

Front frame position NORMAL

Front frame position EXTRA-LONG

It's very important that when the BRAVA stretcher goes into the Bravo, the position of the frontal frame is Normal. If we had Extra Long position, we could cause damage to the stretcher or operator.

The head frame has a mechanical stop in the normal position (1970mm long), another in a folded position and another one in an extended position (intended for when the headrest has a headrest extension kit accessory). When the head frame movement reaches each of these three positions, we should notice the "click" of the red lever housed in its original position.

Head frame in folded position.

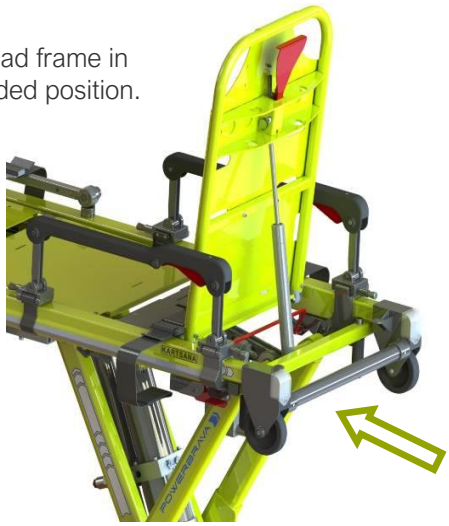

2.3.5. Adjustable leg rest

- <u>Button for adjusting the leg inclination</u>

The required inclination of the leg rest can be obtained by pressing button A and moving the leg rest manually. Once the correct inclination has been reached, release button A to automatically lock the leg rest.

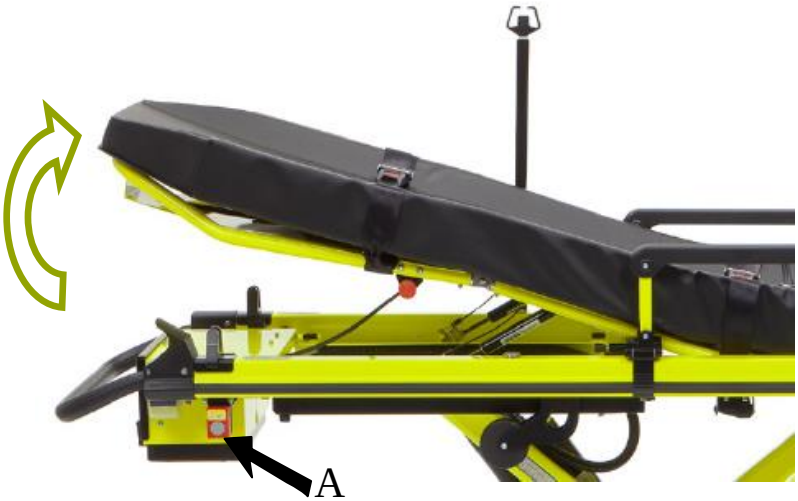

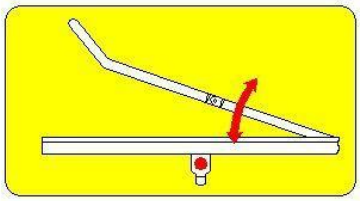

The adhesive on the part of the stretcher shown in the drawing on the left indicates the red button that must be pressed to adjust the position of the legs.

- Button for adjusting the foot inclination

Press button B to change the feet inclination to the required position without changing the inclination of the legs, moving it only in the direction shown in the figure below until the required inclination is obtained.

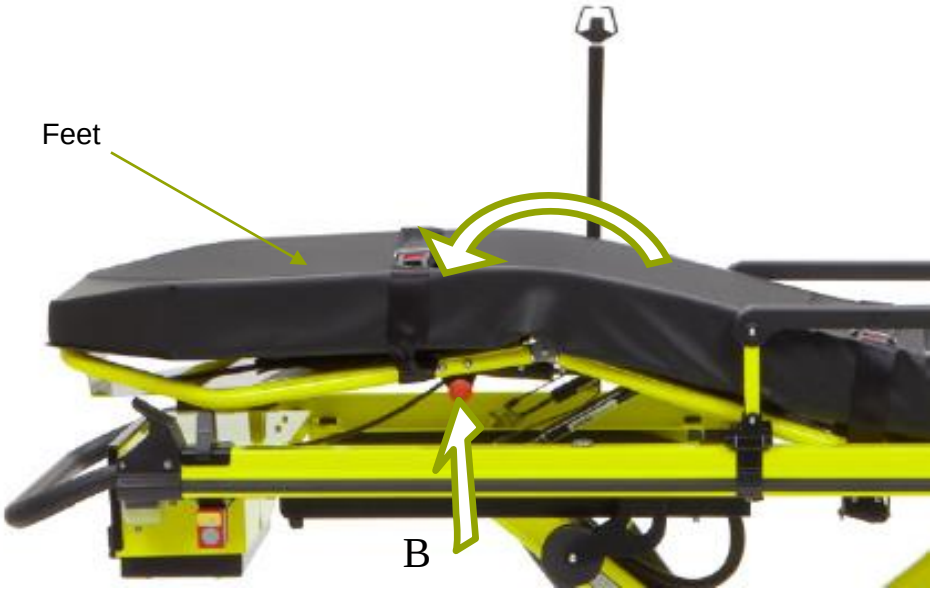

2.3.6. Safety rail

The safety rail has a red bar that locks the rail into place. To lower the rail, just press the bar as shown in the figure below. To lock it in the safety position again, move it to that position manually, and it will automatically lock into place.

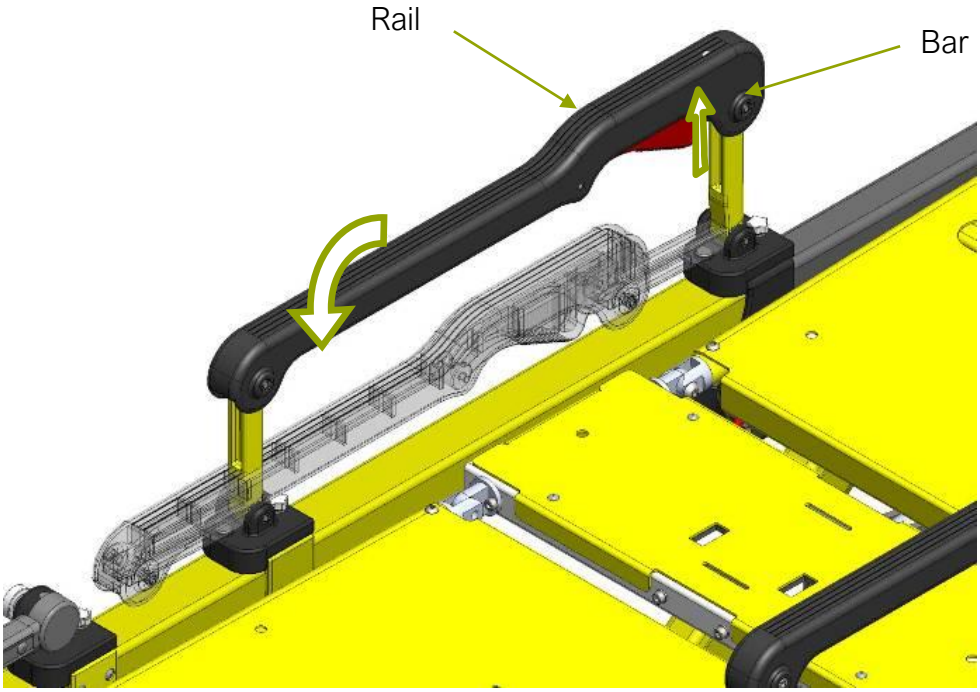

This way the stretcher stays with the folded safety rail:

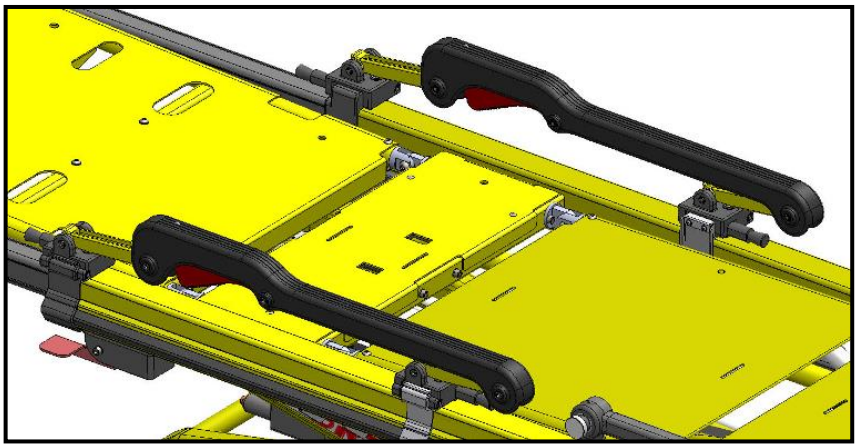

The safety rail can be folded in the width direction too. You must pull the two triggers at same time to open the safety rail in width direction. Perform the same operation on both sides.

Pull the trigger

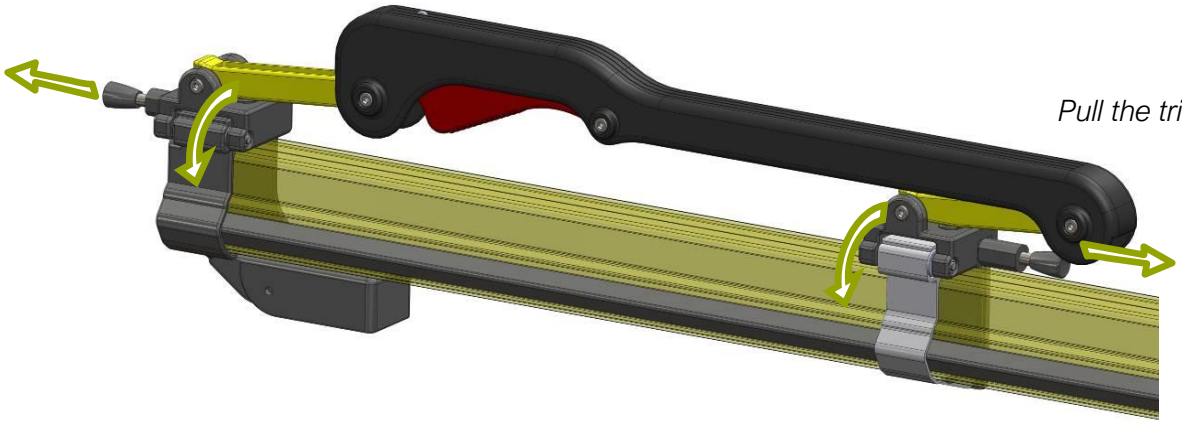

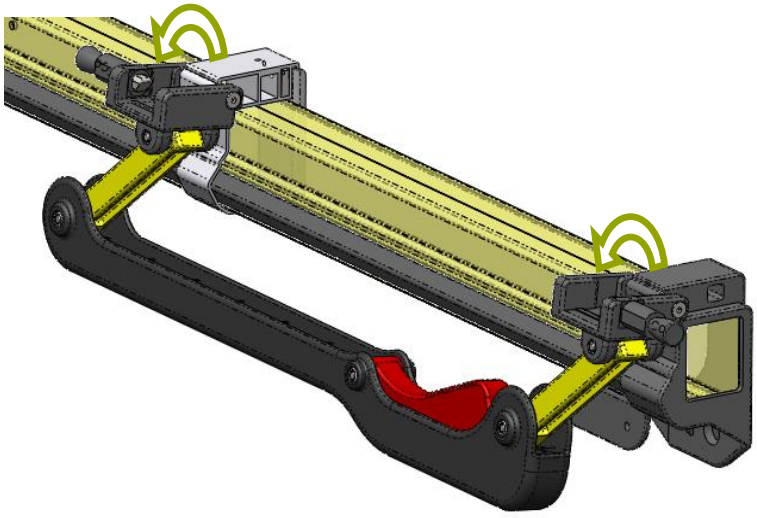

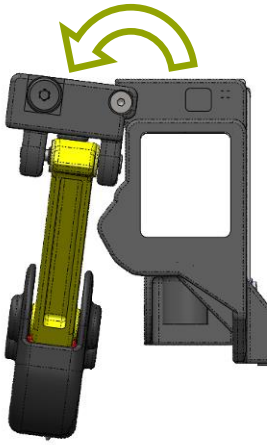

2.3.6.1. How to remove rails and IV support

To install the bariatric kit on the BRAVA stretcher, we need to unfold the two side rails and the drip pole in accordance with the sequence shown below:

1. Open both side rails (left and right) outward.

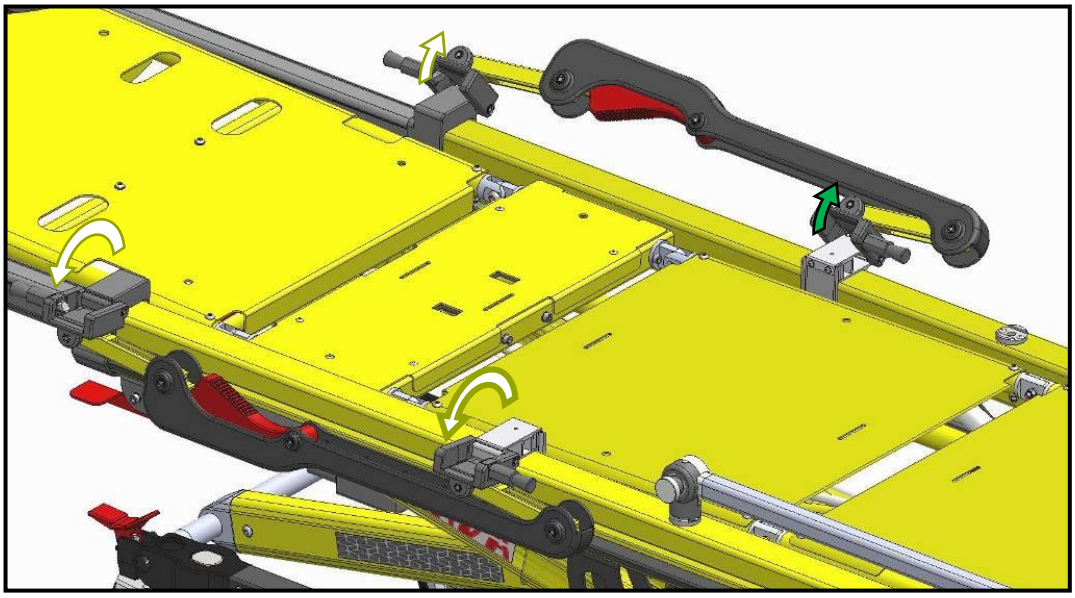

2. You must remove the drip pole turning the knob (D):

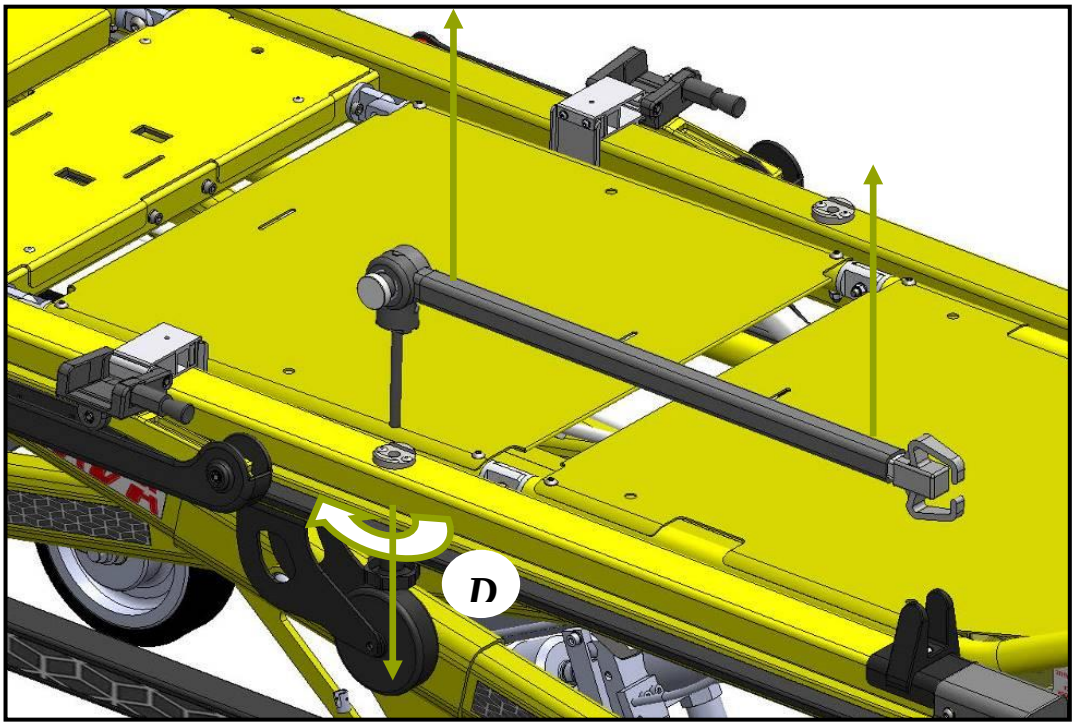

It is also necessary to remove the mattress from the stretcher, thereby leaving the top of the BRAVA entirely clear.

2.3.7. Intravenous drip stand.

The stretcher comes with a drip holder located on the left-hand side. Unscrewing the silver knob “R” we lift the salt solution section to the vertical position perpendicular to the stretcher, then we twist the knob again.

The length of said drip pole may be lengthened or shortened pressing a small positioner located on the inner side, raising the hook until the upper position is reached.

The "drip pole" assembly can be placed on either the left or right side of the stretcher.

Dimensions: 539,5 (+288extendido) mm x 61mm

Weight: 0,48 Kg

Maximum load allowed for the drip pole: 6 Kg

The maximum weight is indicated on the drip rod by an adhesive like the one shown above.

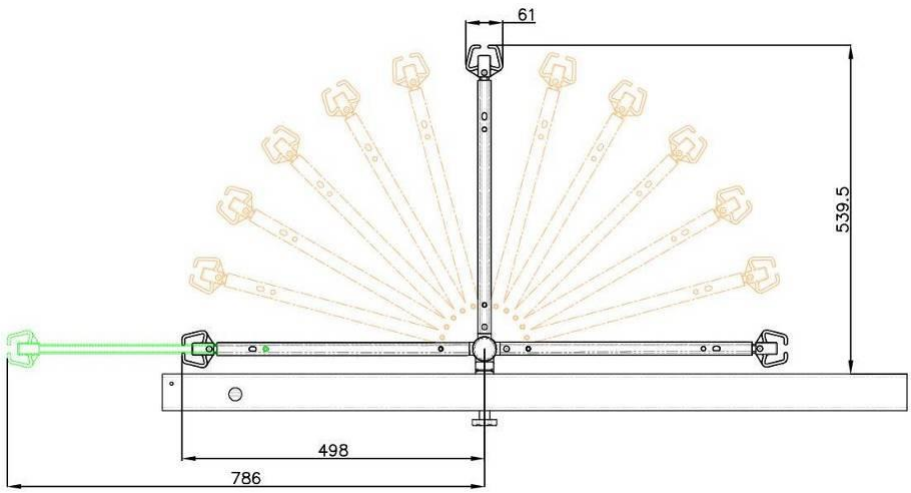

2.3.8. Way of fastening the safety belts to the patient.

2.3.8.1. Head belts.

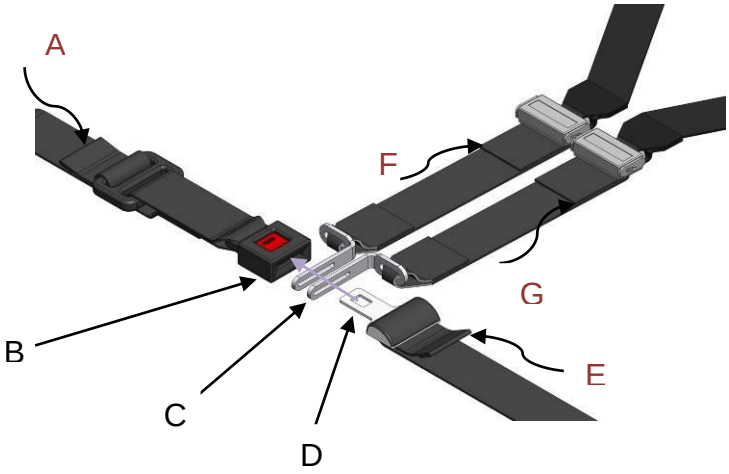

Place the clasps (C) in the position shown in the figure above. Pass the male part of the buckle (D) between the openings (C) until it is inserted into the female part B. Once all the parts are fastened, place them in the centre and tighten them adjusting the belt tension at ends A, E, F and/or G. (In the feet belt the C fasteners do not show).

2.3.8.2. Abdomen belts

Put the female part of the buckle A and male part B in the position shown in the figure below and insert the latter into the slot in the former. Once the assembly is firmly secured, centre and tauten it, adjusting the tension of the belt at end C.

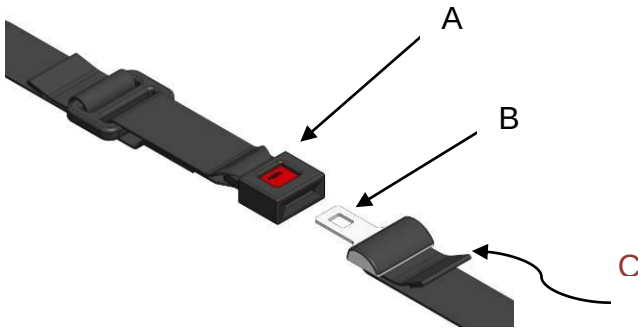

It is advisable to ensure that while the patient is on the stretcher, he/she is always secured by the safety belts.

2.3.9. Dismantling-assembly of the stretcher belts.

Anchoring with a plate.

Loosen the screws as shown in the following figure. To assembly just follow the same process but in reverse order.

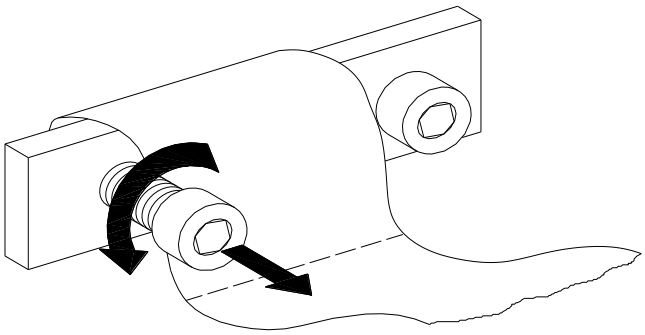

To assemble them just follow the process in reverse order, fastening the 'A' screws to the 'B' nuts inside the guides of the aluminium profile guide.

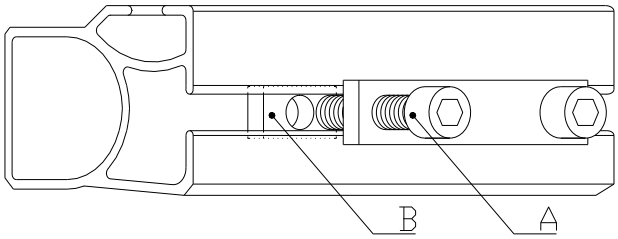

2.3.10. Position of the belts.

2.3.10.1. Lateral belts.

The belts are positioned at the approximate distances shown in the figure below.

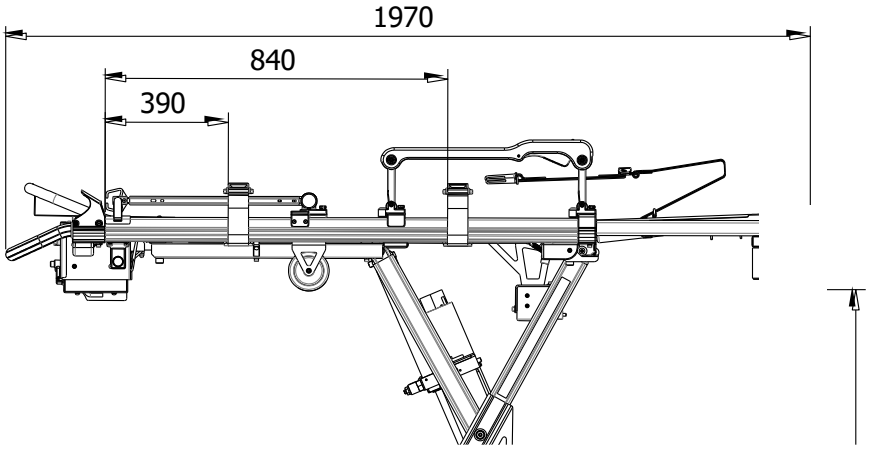

2.3.10.2. Head belts

The headrest belts must go through the holes in the headrest and must be secured in the panel crosspiece with a knot as shown in the following figure.

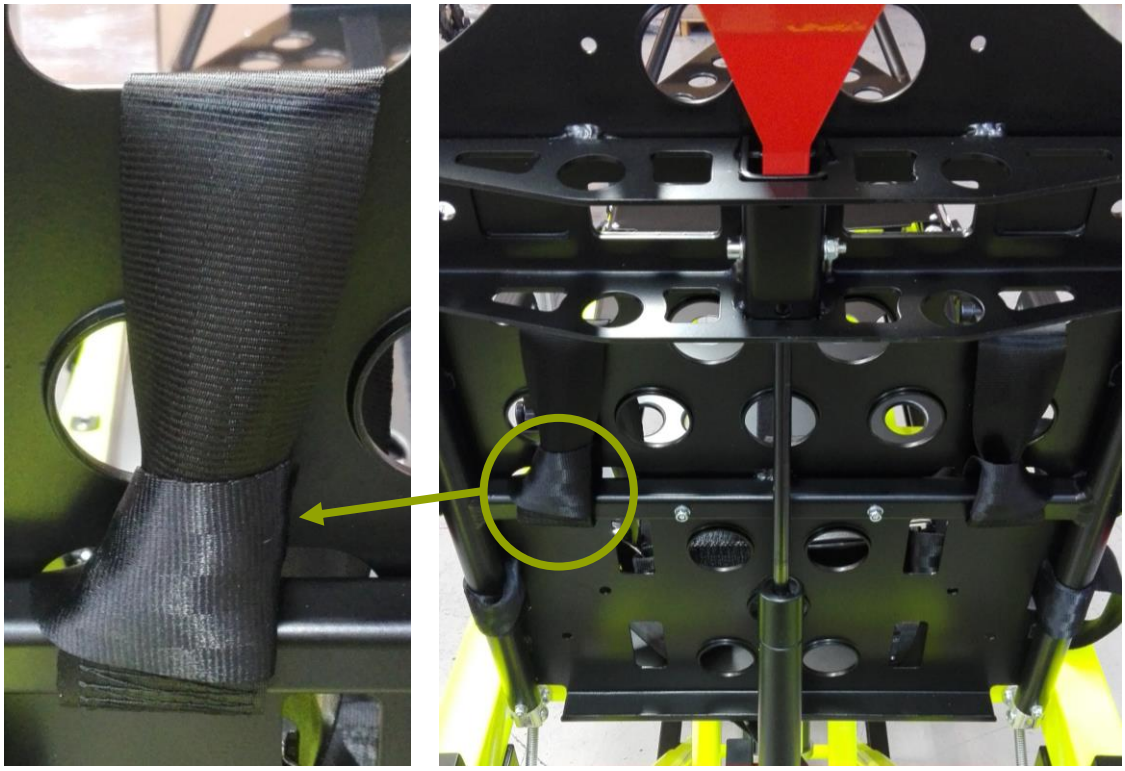

The code numbers for our belts are:

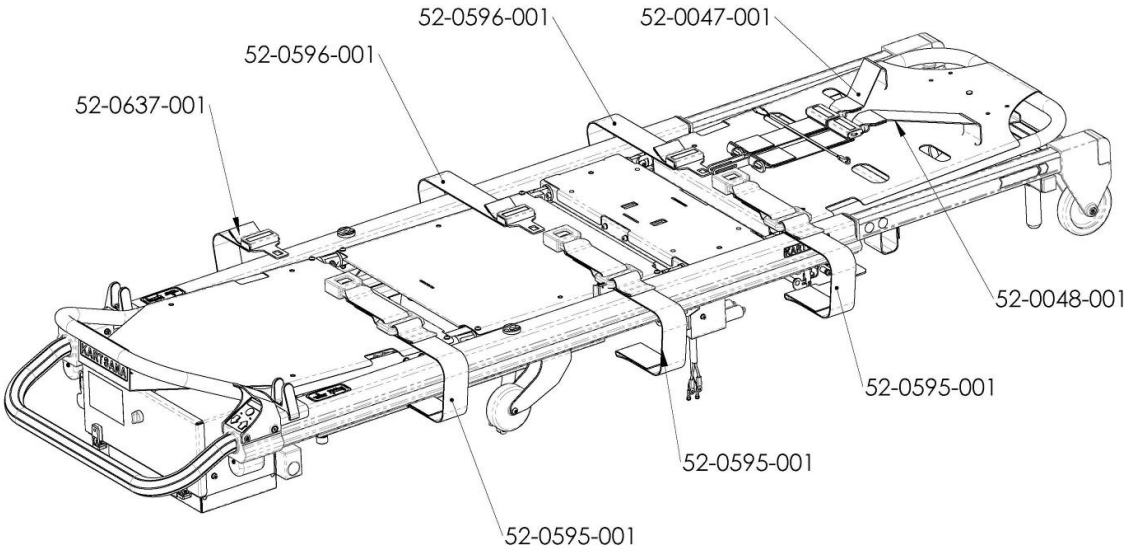

2.3.11. Rear wheel brake lever.

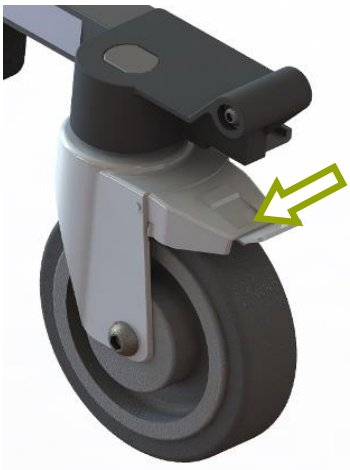

Activate the lever with your foot to enable the brake to lock the rear wheels. This lever locks both the lengthways and revolving movement of the trolley.

IMPORTANT: when breaking the stretcher, use both brakes of the rear wheels at the same time, especially for weight over 250kg.

2.3.12. Lever to unlock revolving front wheels

By pressing the central rear trigger, we unlock the front wheels to spin freely. See figures:

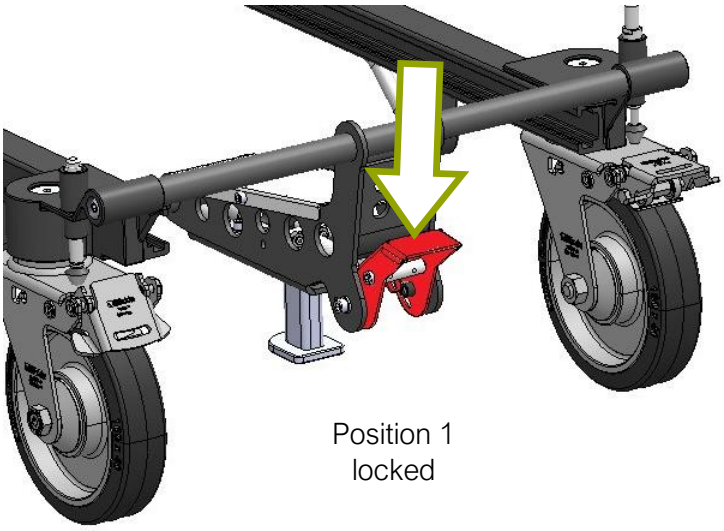

Position 1
locked

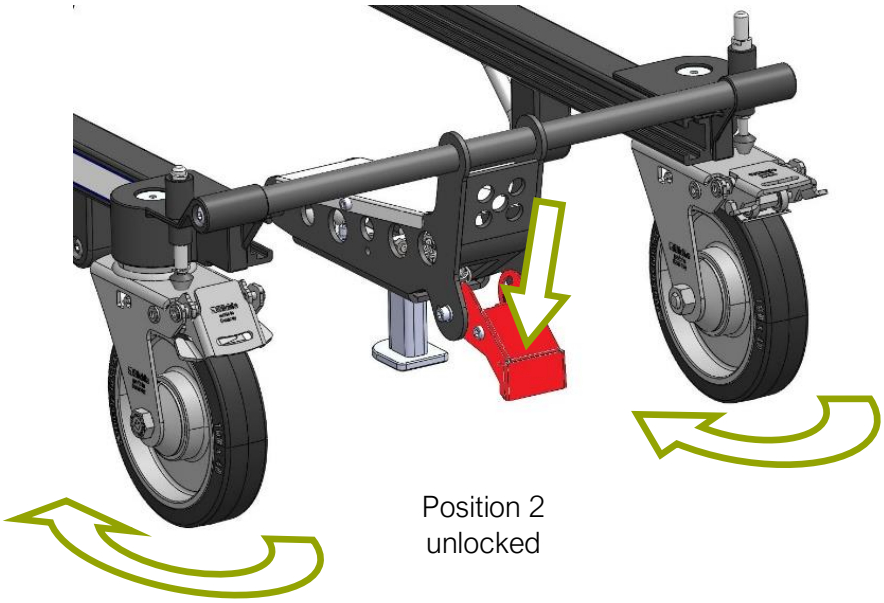

Position 2
unlocked

Front wheels **must be always blocked** (position 1) when you load the stretcher on the rail. The omission of this, may cause injury to the patient or operator.

Never apply the optional wheel lock(s) while a patient is on the stretcher (if you must move it). Tipping could occur if the stretcher is moved while the wheel lock is applied, resulting in injury to the patient or operator and/or damage to the stretcher.

Transporting the stretcher sideways can cause the stretcher to tip, resulting in possible damage to the product and/or injury to the patient or operator. Transporting the stretcher in a lowered position, head, or foot end first, minimizes the potential of a stretcher tip

Never leave a patient unattended on the stretcher or injury could result. Hold the stretcher securely while a patient is on the product.

Never install or use a wheel lock on a stretcher with excessively worn wheels. Installing or using a wheel lock on a wheel with less than a 160mm diameter could compromise the holding ability of the wheel lock, possibly resulting in injury to the patient or operator and/or damage to the stretcher or other equipment.

Wheel lock(s) are only intended to help prevent the stretcher from rolling while unattended and to aid in patient transfer. A wheel lock may not provide sufficient resistance on all surfaces or under high loads.

For weights higher than 200kg it recommended to use the stretcher by a low position in patient transport, rising the stretcher until the necessary position just in the moment of introduce it into the ambulance.

2.3.13. Assembling the BRAVA Stretcher onto the BRAVO Rail

We must adjust the maximum elevation range of the stretcher only the **first time** we load it on the rail. If we change to another ambulance of a different height, we will have to adjust it again.

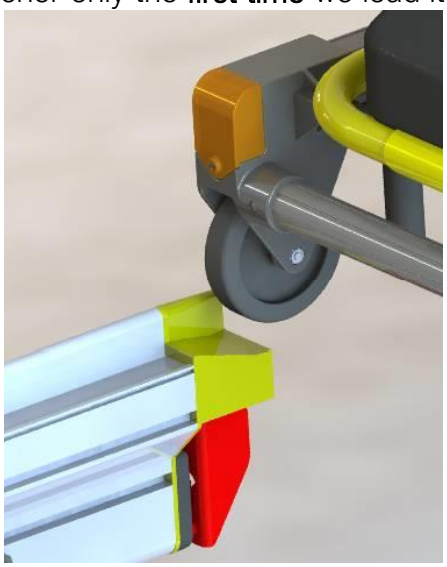

To adjust the maximum elevation of the upwards range of the stretcher, we must place it opposite the extended r Safety handrail Safety handrail ail on the outside of the ambulance. Place the front wheels half a centimetre above where the small loading wheels slide. See picture

Keep the stretcher in this position and take it off the rail. Afterwards we must look for the adjusting cam in the upper part of the stretcher near where the shock absorbers are joined to the back rest. The cam is joined

to the axle with a “H” screw which must be loosened, then we will rotate the cam until it presses against the limit switch. For this purpose, there is a sticker with a graduated scale which can be used for reference. Once positioned so that we have heard the “click” at the limit switch we will tighten the screw again to set the cam in this final position.

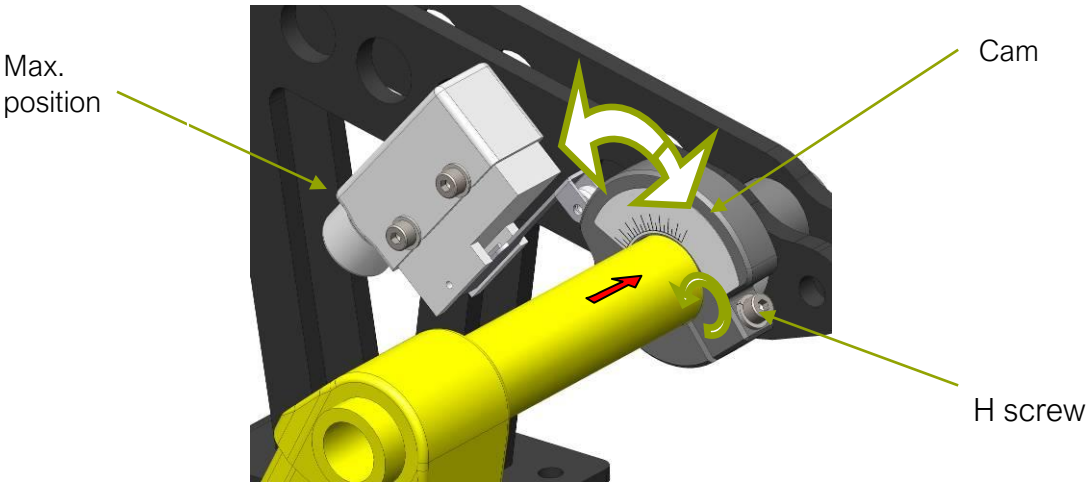

From then on, the stretcher will only rise as far as the elevation set.

Check by carrying out a loading manoeuvre and readjust if necessary.

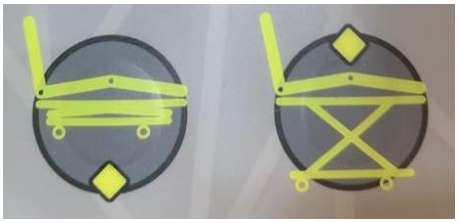

Leg folding and unfolding buttons

To load the stretcher onto the Bravo rail it must be outside the ambulance. We will guide the stretcher towards the parts of the ambulance that project out and make the small wheels of the stretcher join the rail.

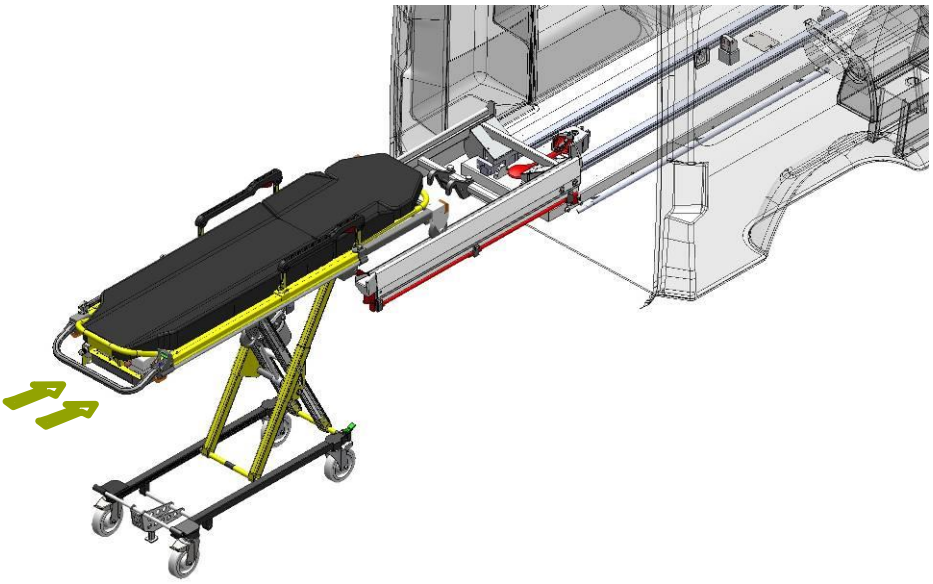

Once the stretcher has been lined up with the cross section of the rails, push the stretcher until the small wheels limit has been reached.

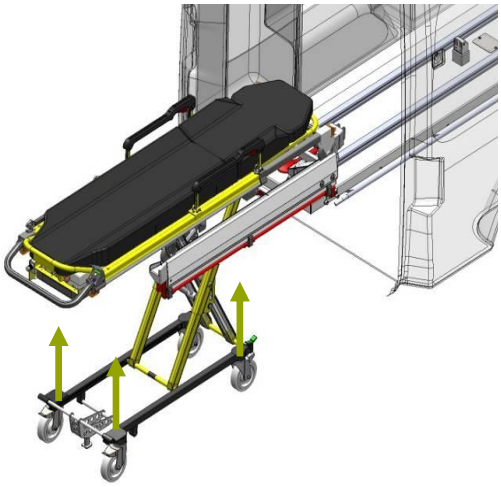

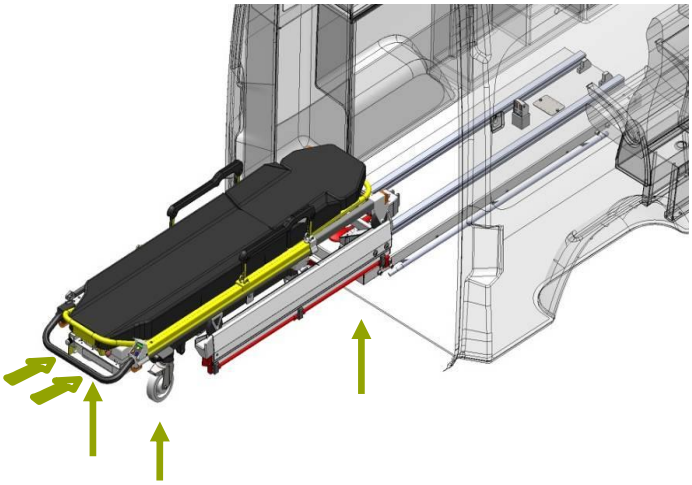

Front wheels **must be always blocked** (POSITION 1) when you load the stretcher on the rail.

Press the rear right “B” rail red trigger to unlock the mechanism and push the stretcher towards the inside until the limit has been reached. Once this process has finished the stretcher should be perfectly secured on the rail.

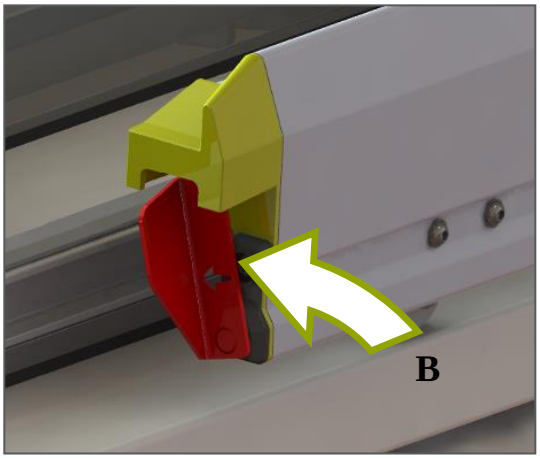

To be sure that the whole stretcher rail is correctly placed make sure that the unload lever is in the horizontal position. This is the 3rd point in the inside of its compartment.

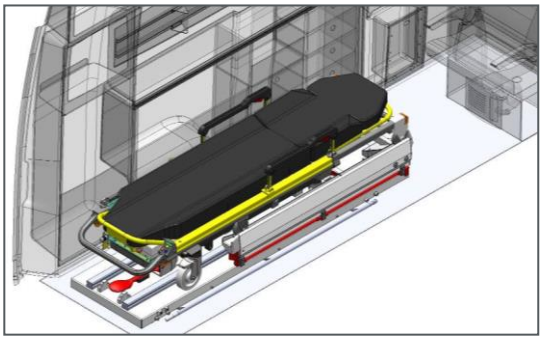

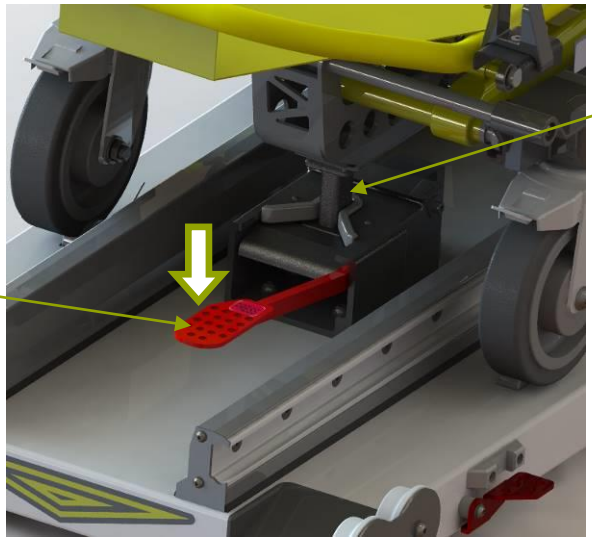

IMPORTANT: do not disconnect the supporting battery from the ambulance when it isn't doing any service, to allow the correct charge of the stretcher batteries between services.

2.3.14. Transferring the patient to the stretcher.

- To transfer the patient to the stretcher:

1. Bring closer the stretcher to the patient.
2. Place the stretcher beside the patient and raise or lower the stretcher to the level of the patient.
3. Lower the siderails and open the restraint belts.
4. Transfer the patient to the stretcher using accepted emergency medical procedures.
5. Use all the restraint belts to secure the patient to the stretcher.
6. Adjust the backrest and footrest as necessary.

- When rolling the stretcher:

1. Make sure that all the restraint belts are securely buckled around the patient.
2. Always position an operator at the foot end and one at the head end of the cot when rolling the cot with a patient on it.
3. Approach door sills and/or other low obstacles squarely and lift each set of wheels over the obstacle separately.

- Proper lifting techniques

When lifting the cot and patient, there are basic guidelines to help you avoid injuries:
- Keep your hands close to your body.
- Keep your back straight.
- Coordinate your movements with your partner and lift with your legs.
- Avoid twisting.
- Always use the stretcher as we describe in this manual.

3. FAULTS

If the hydraulic system breaks down, pull red trigger located next to the batteries at the rear. The stretcher will go down until the lower limit is reached and will remain in this position.

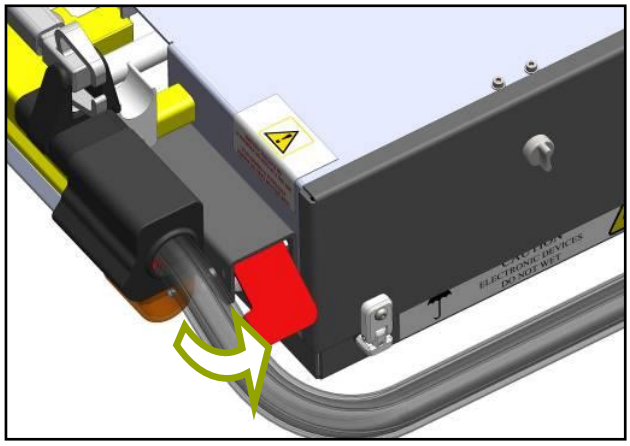

Then, the rail hooks should be removed (see figure below) and load the broken-down stretcher manually onto the Bravo rail, with two people. Once placed in the loaded position, that is, with the rail outside the ambulance, place the hooks back in their original position.

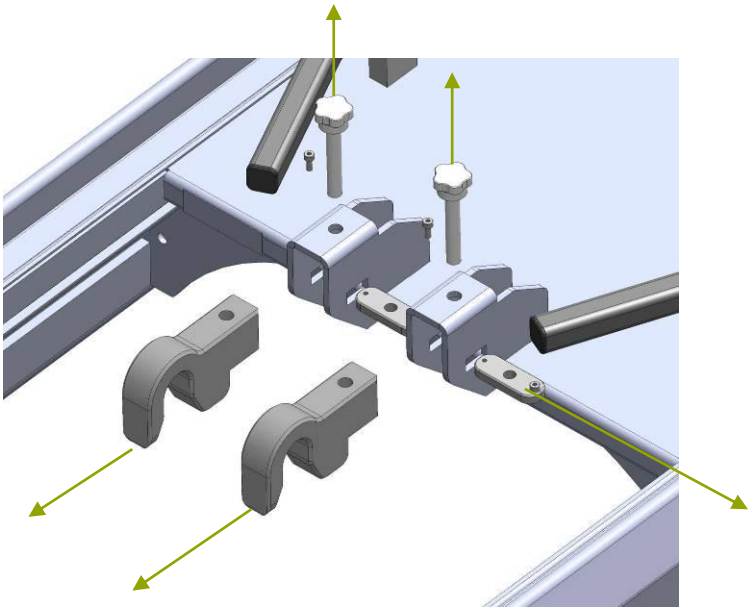

Afterwards, carry out the loading process in a normal fashion, as described above, push the stretcher towards the inside of the ambulance until the inner limit is reached.

4. PRODUCT CARE & DISPOSAL

4.1. Servicing requests

For any service requests or consultations regarding the use, maintenance, or installation of any KARTSANA product, please contact KARTSANA Customer Care Service.

- Telephone #: +34 93 715 86 72
- E-mail: info@kartsana.com
- Narcís Monturiol, 34
  08192 Sant Quirze del Vallès
  Barcelona (Spain)

4.2. Environmental conditions

For both use and storage:

Temperature: from -10 °C to +60 °C

Relative Humidity: 5 - 95%

4.3 Cleaning

When disinfecting the device, use non-corrosive products that will not damage the surface of the materials and wipe with a cloth or similar non-abrasive cleaning utensil. If the surface to be disinfected is greased, re-grease it after disinfection.

All disinfectants must be used in accordance with the manufacturer's instructions.

Do not wash the product with high pressure water, take special care with electrical components, the circuit board housing, keypads, LEDs and motor.

Remove the batteries before washing and then thoroughly dry the terminal contacts.

The manufacturer will not be held responsible for any anomaly or damage caused by using a cleaning product that could damage the stretcher's surface materials.

To ensure the hygiene and proper conservation of the product components, the manufacturer recommends that they be disinfected after each use.

4.4. Maintenance

4.4.1. Precautionary Maintenance

A periodic and correct maintenance guarantees the durability of the device.

Creating a maintenance plan including periodic check-ups and establishing a responsible employee to carry it out is recommended.

The person who carries out the precautionary maintenance of the appliance (user, manufacturer/supplier or third party) must meet or adhere to the following basic requirements:

- ✓ Possession of technical knowledge pertaining to the device and of the periodic maintenance procedures as described in these instructions.
- ✓ Use or support of qualified technical personnel trained specifically in the maintenance operations required for the device in question.
- ✓ Use of components, replacement parts, or accessories that are either original to or approved by the supplier to avoid the need to carry out alterations or modifications to the device that would void warranty.
- ✓ Record keeping of all maintenance operations carried out on the device, in adherence to the instructions of European Council directive 93/42/CEE which states the obligation of the purchaser to provide when requested the afore mentioned after-sales care record for the purpose of product traceability.

Check the device before every use.

Before each service, the following points must be ensured:

- ✓ Functionality of the product.
- ✓ Fixation of nuts and bolts.
- ✓ Good condition of moving parts, wheels, belts, mattress.
- ✓ Spring sensibility.
- ✓ Full working order of all electrical functions must be checked: full range of movement, lighting, etc.

If the device does not appear suitable for correct and safe use, it must be taken out of service until the device is repaired or restored to full working order.

Do not modify the device structurally for any reason, as this may cause serious damage to patients and / or operators.

Recommended lubrication interval for moving parts:

• 1 - 30 services per month: every 3 months

• 30 - 50 services per month: every 2 months

• over 150 services per month: every month

All maintenance other than lubrication, tightening of nuts and bolts and ordinary cleaning must be performed by KARTSANA or an authorized service centre.

4.4.2. Servicing Maintenance

The person to whom the servicing of the product is entrusted must guarantee the following basic requirements:

- ✓ Adequate knowledge of the product, of its technical / construction features, of checkpoints and final tests, packaging, conservation, and handling.
- ✓ Adequate knowledge of the technology used in production of the product.
- ✓ Knowledge of all correct product functions and of any potential risks or possible malfunctions or breakdowns of the product
- ✓ Possession of all instruments necessary for carrying out any technical servicing or minor repairs.
- ✓ Possession (or ability to procure) replacement parts from the original manufacturer or authorised by the manufacturer.
- ✓ Use or support of specialized technical personnel trained by the manufacturer for the servicing of the product in question.
- ✓ Record keeping of all maintenance operations carried out on the device, in adherence to the instructions of European Council directive 93/42/CEE which states the obligation of the purchaser to provide when requested the afore mentioned after-sales care record for the purpose of product traceability.

4.5. Transport and storage

Before transporting the device, make sure it has been packed adequately and secured to avoid damage during transport.

Keep the original packaging for other eventual transports. Any damage caused to the device during transport is not covered by warranty. Repairs and substitutions of damaged parts are at the customer's charge.

The device must be stored in a dry place.

During storage, do not put any heavy object on top of the product. It should not be used as support for any type of object.

4.6. Disposal

When the product is no longer in working condition, if it has not been contaminated by any corrosive or contagious agent, it can be disposed of as any metal-based waste, following the local current regulations regarding metal-based waste disposal.

5. EXPLODED STRETCHER BRAVA (TG-1000)

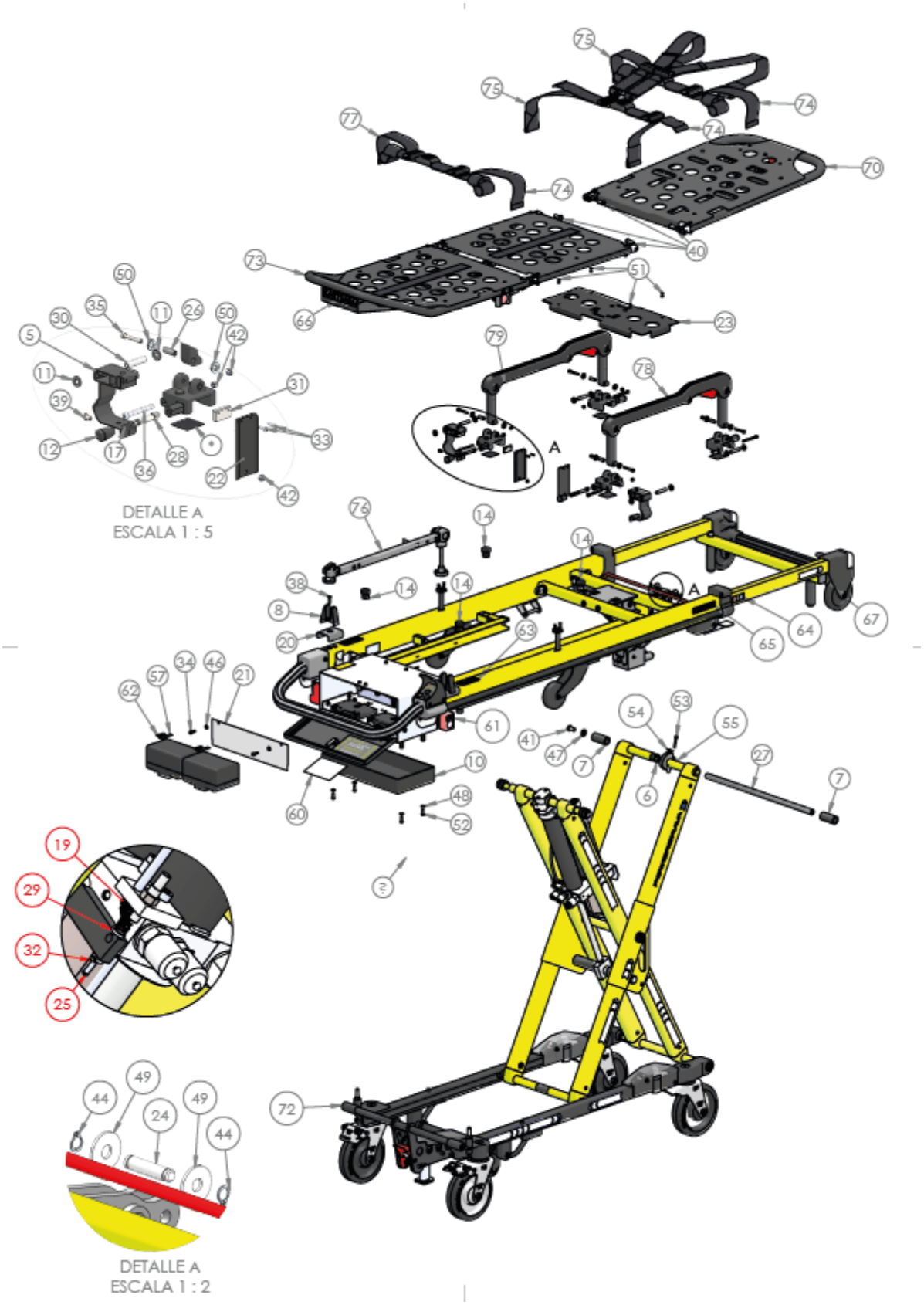

Nº	Nº DE PIEZA	Descripción	UDS
1	01-0258-003	FUNDICIÓN DCH TRAS BARANDILLA ABATIBLE BRAVA	1
2	01-0259-003	FUNDICION IZQ TRAS BARANDILLA ABATIBLE BRAVA	1
3	01-0263-003	FUNDICIÓN DCH TRAS BARANDILLA ABATIBLE BRAVA	1
4	01-0264-004	FUNDICION IZQ DEL BARANDILLA ABATIBLE BRAVA	1
5	03-0922-001	PERFIL BARANDI.BRAVA BRUTO 6082 T/6 REF.14-0201-C1	2
6	05-0211-001	CASQUILLO PLASTICO EJE PATAS BRAVA	2
7	05-0215-001	CASQUILLO LARGO PLASTICO EJE PATAS BRAVA	2
8	05-0246-003	TOPE PALO SUERO BRAVA	2
9	05-0433-001	SOPORTE POSICIONADOR PALO DE SUERO	2
10	05-0465-00A	TAPA INFERIOR CHAPA BATERIAS BRAVA (ant.11-0644-003)	1
11	05-0566-002	ARANDELA NYLON d.8 ESPECIAL 2.8 mm	8
12	06-0003-001	POMO PARA SILLAS 110519101	4
13	06-0006-001	TAPONES D12. R26	4
14	06-0021-001	TAPON REPRIM R-5 ø25	4
15	06-0068-001	TAPON PVC TOPE BARAN. BRAVA 40048 MOSS.	2
16	07-0031-002	BATERIA BRAVA	2
17	09-0108-001	S-FUEGO ANTI-TILT LUG SPRING	4
18	09-0129-001	MUELLE CABLE RESORTES PIERNAZAL BRAVA	2
19	09-0202-001	MUELLE MOTOR TIRADOR EMERGENCIA BRAVA	1
20	11-0650-003	CHAPA OCULTA AGUJEROS PERFIL LONA BRAVA	2
21	11-0666-001	CHAPA SEPARADOR CABLES BRAVA	1
22	11-0837-001	CHAPA TAPA LATERAL BARANDILLA BRAVA	2
23	11-1295-001	CHAPA CAJETIN BRAVA	1
24	12-0048-001	EJE ANILLO ELASTICO AMORTI.CABEZAL	1
25	12-0094-001	Terminal de cable	3
26	12-0178-001	CASQUILLO BARANDILLA S-FUEGO	4
27	12-0282-001	EJE DEL. SUP. PATAS BRAVA	1
28	12-0357-002	TETON FIJACION BARANDILLA DESPLEGABLE BRAVA	4
29	12-0381-001	POSICIONADOR MUELLE VALVULA SEGURIDAD	1
30	12-0423-002	CASQUILLO ø8 X 5 X 39 BARANDILLA BRABA	4
31	12-0467-001	TUERCA RECTANGULAR BARANDILLA ABATIBLE BRAVA	2
32	12-0692-001	PERRILLO TENSOR CABLES	3
33	13-0001-001	ALLEN DIN 912 M3x12 - 8.8 CINCADO	4
34	13-0013-001	ALLEN DIN 912 M5X16 - 8.8 CINCADO	2
35	13-0016-001	ALLEN DIN 912 M5X35 - 8.8 CINCADO	4
36	13-0018-001	ALLEN DIN 912 M5X55 - 8.8 CINCADO	4
37	13-0022-001	ALLEN DIN 912 M6X14 - 8.8 CINCADO	2
38	13-0073-001	AVELLANADO ALLEN DIN 7991 - M6 x 20 CINCADO	2
39	13-0096-001	DIN 7380 ULS M5X10 -10.9 CINCADO	2
40	13-0114-001	ULS ISO-7381 M8x25 10.9 CINCADO	4
41	13-0125-001	ULS ISO-7381 M10x20 10.9 CINCADO	2
42	13-0176-001	TUERCA AUTOBLOCANTE M5	10
43	13-0195-001	TUERCA REMACHABLE M6	2
44	13-0196-001	ANILLO ELASTICO d.8	4
45	13-0202-001	ARANDELA ANCHA d6 CINCADA	2
46	13-0206-001	ARANDELA DIN 125-A ø5 CINCADA	2
47	13-0210-001	ARANDELA d10 CINCADA	2
48	13-0220-001	ARANDELA NYLON d.6	4
49	13-0222-001	ARANDELA ANCHA NYLON d8	2
50	13-0223-001	ARANDELA NYLON d.8	8
51	13-0318-001	REMACHE DE ACERO INOX. 4X12	8
52	13-0400-001	DIN 7380 ULS M6x16 -10.9 INOX.	4
53	13-0480-001	ALLEN DIN 912 M5X30 - 8.8 CINCADO	1
54	14-0011-001	ETIQUETA FLECHA BRAVA	1
55	14-0012-001	ETIQUETA GRADUACION BRAVA	1
56	14-0019-001	ETIQUE.USAR EN CASO AVERIA	1
57	14-0124-002	ETIQUETAS KARTSANA EN REGULADOR DE CINTURON	2
58	14-0127-001	ETIQUETA NO CARGAR PUNOS FUERA	2
59	14-0128-001	ETIQUETA DATOS KARTSANA	1
60	14-0130-006	ETIQUETA INFORMATIVA BRAVA	1
61	14-0131-001	ETIQUETA VERDE PIERNAZAL	1
62	14-0139-001	ETIQUETA NUM. SERIE BATERIA PEQUENA BLANCA	3
63	14-0165-001	ETIQUETA NEGRA 300KG BRAVA	2
64	14-0166-001	ETIQUETA NEGRA 10G BRAVA	2
65	14-0167-001	ETIQUETA KARTSANA PEQUEÑA BRAVA	2
66	14-0168-002	ETIQUETA LOGO KARTSANA PARA BRAVA	1
67	14-0170-001	ETIQUETA REFLECT. ZONA CABEZAL EXTENSIBLE BRAVA	2
68	52-0047-001	CINTURON TORACICO IZQUIERDO	1
69	52-0048-001	CINTURON TORACICO DERECHO	1
70	52-0476-009	PREMONTAJE COMPLETO CABEZAL	1
71	52-0477-045	AREA PACIENTE COMPLETO POWER BRAVA	1
72	52-0557-008	CHASIS POWER BRAVA	1
73	52-0558-003	PIERNAZAL DOBLE COMPLE.BRAVA	1
74	52-0595-003	CINTURON CORTO CON TENSOR BRAVA	3
75	52-0596-003	PREMONTAJE CINTURON LARGO NEGRO BRAVA	2
76	52-0615-001	PALO DE SUERO BRAVA (INSERTO TORNILLO)	1
77	52-0637-002	PREMONTAJE CINTURON CORTO NEGRO BRAVA	1
78	52-0670-002	BARANDILLA DERECHA BRAVA	1
79	52-0671-002	BARANDILLA IZQUIERDA BRAVA	1

5.1. Complete paciente area BRAVA

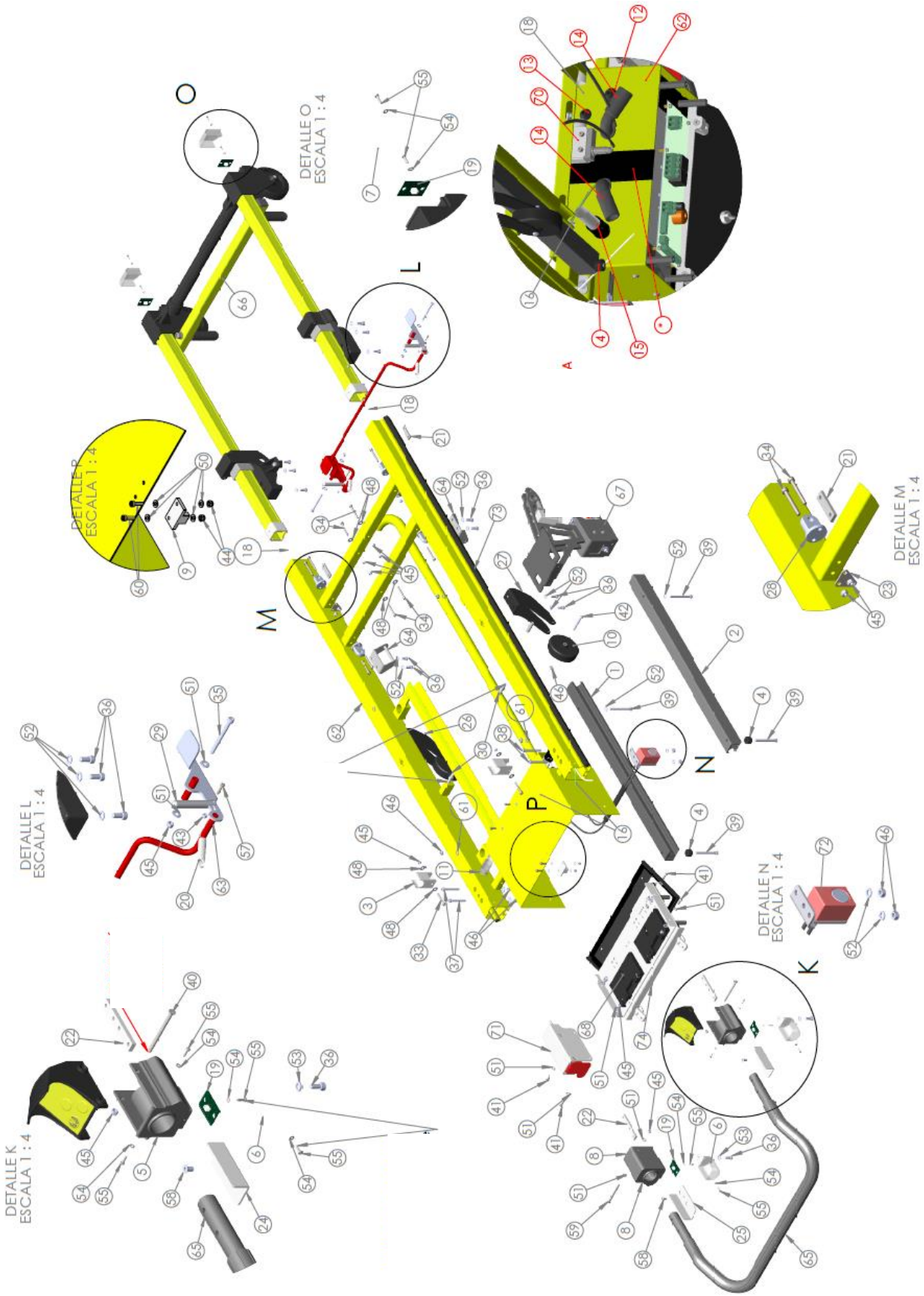

Nº	Nº DE PIEZA	Descripción	UDS
1	03-1130-001	GUIA SUPERIOR IZQ. ROD. BRAVA	1
2	03-1131-001	GUIA SUPERIOR DCH. ROD. BRAVA	1
3	05-0210-001	ABRAZADERA PIERNAZAL BRAVA	2
4	05-0214-001	TOPE POSICIÓN PLEGADA BRAVA	2
5	05-0223-001	SOPORTE PLACA MANDO BRAVA	1
6	05-0227-001	PILOTO TRAS. BRAVA	2
7	05-0232-001	PILOTO DEL. BRAVA	2
8	05-0233-002	PROTECTOR PERFIL GOMA IZQ. LUZ BRAVA	1
9	05-0273-001	TOPE PESTILLO TAPA BATERÍAS BRAVA	1
10	05-0355-001	RUEDA ø85 x 30 CON CASQUILLO	2
11	06-0050-001	PASACABLES MOTOR POWER PACKER Ref 494612	3
12	06-0051-001	PASACABLES IP67 SR 1703 M20 (Ref. 496379)	1
13	06-0052-001	PASACABLES IP67 SR 1703 M16 (Ref. 496378)	1
14	06-0053-001	ROSCA EXTERNA CODO CONDUCTO NYLON (Ref: 494613)	2
15	06-0071-001	CONDUCTO DE NYLON 150MM SR1758 (Ref. 494611)	3
16	07-0038-004	CABLE TECLADO BRAVA	1
17	07-0039-001	CABLE LEDS TRASEROS BRAVA	2
18	07-0040-001	CABLE LEDS DELANTEROS BRAVA	2
19	07-0104-001	PLACA ELECTRÓNICA LEDs BRAVA	4
20	09-0060-001	MUELLE GANCHO CENTRAL R-450	2
21	11-0535-001	PLETINA ROSCADA AMARRE FUND. DEL. BRAVA	2
22	11-0548-002	PLETINA ROSCADA AMARRE PUÑOS TRAS. BRAVA	2
23	11-0595-002	CHAPA MUELLE GANCHO CABEZAL	2
24	11-0799-001	CHAPA INTERIOR PERFIL BOTONERA BRAVA	1
25	11-0800-001	CHAPA INTERIOR PERFIL BOTONERA BRAVA	1
26	11-0867-003	HORQUILLA IZQ. RUEDA BRAVA BAJO PALO SUERO	1
27	11-1308-001	HORQUILLA DCHA. RUEDA BRAVA BAJO PALO SUERO	1
28	12-0255-001	MACIZO MACHO BISAGRA CABEZAL BRAVA	4
29	12-0257-002	TETONES PEQUEÑOS BLOQUEO PUÑOS BRAVA	2
30	12-0317-001	BULON AMORTIG. PIERNAZAL 1 BRAVA	2
31	12-0948-001	CASQUILLO DISTANCIADOR ø10 x ø6 x 31	2
32	13-0006-001	ALLEN DIN 912 M4X12 - 8.8 CINCADO	2
33	13-0016-001	ALLEN DIN 912 M5X35 - 8.8 CINCADO	2
34	13-0017-001	ALLEN DIN 912 M5X40 - 8.8 CINCADO	12
35	13-0018-001	ALLEN DIN 912 M5X55 - 8.8 CINCADO	2
36	13-0022-001	ALLEN DIN 912 M6X14 - 8.8 CINCADO	16
37	13-0030-001	ALLEN DIN 912 M6X45 - 8.8 CINCADO	2
38	13-0031-001	ALLEN DIN 912 M6X50 - 8.8 CINCADO	2
39	13-0033-001	ALLEN DIN 912 M6X60 - 8.8 CINCADO	4

Nº	Nº DE PIEZA	Descripción	UDS
40	13-0070-001	AVELLANADO ALLEN DIN 7991 - M5 x 70 CINCADO	1
41	13-0097-001	ULS ISO-7381 M5x16 CINCADO	4
42	13-0108-001	ULS ISO-7381 M6x45 CINCADO	2
43	13-0174-001	TUERCA AUTOBLOCANTE M4	2
44	13-0175-001	TUERCA AUTOBLOCANTE M4	4
45	13-0176-001	TUERCA AUTOBLOCANTE M5	22
46	13-0177-001	TUERCA AUTOBLOCANTE M6	10
47	13-0193-001	TUERCA RECTANGULAR M6	12
48	13-0200-001	ARANDELA ANCHA d 5 CINCADA	12
49	13-0202-001	ARANDELA ANCHA d6 CINCADA	2
50	13-0205-001	ARANDELA d4 CINCADA	8
51	13-0206-001	ARANDELA DIN 125-A ø5 CINCADA	14
52	13-0207-001	ARANDELA d6 CINCADA	18
53	13-0220-001	ARANDELA NYLON d.6	2
54	13-0266-001	ARANDELA d3 CINCADA	10
55	13-0285-001	TORNILLO AUTO-ROSCANTE ST2.9x13	10
56	13-0329-001	TUERCA REMACHABLE M5	2
57	13-0342-001	ALLEN DIN 912 M3x14 - 8.8 CINCADO	2
58	13-0439-001	AVELL. DIN 7991 ALLEN M6 x 12 CINCADO	2
59	13-0463-001	DIN 7380 ULS M5X60 -10.9 CINCADO	1
60	13-0467-001	ALLEN DIN 912 M4X14 - 8.8 CINCADO	2
61	13-0496-001	ARANDELA GROWER d6 CINCADA	4
62	50-0364-021	CUADRO SOLDADO BRAVA	1
63	50-0366-007	MANETAS SOLDADAS PUÑOS TELESC. BRAVA	1
64	50-0492-001	SOPORTE CINTURON INTERMEDIO BRAVA	2
65	52-0330-001	PREMONTAJE PUÑO TRASERO + MACIZOS BRAVA	1
66	52-0486-007	CONJ. CABEZAL DESPLEGABLE BRAVA	1
67	52-0487-010	ENCHUFE DE CARGA BRAVA	1
68	52-0519-002	PREMONT. TAPA BATERÍAS BRAVA	1
69	52-0523-004	PREMONTAJE TECLADO BRAVA	1
70	52-0524-001	PREMONTAJE FINAL DE CARRERA TRASERO BRAVA	1
71	52-0525-002	PREMONTAJE PULSADOR EMERGENCIA BRAVA	1
72	52-0774-001	PREMONTAJE PULSADOR PIERNAZAL BRAVA	1
73	60-0160-001 1230 mm	EMBELLECEDOR PERFIL LONA BRAVA	2
74	CAMILLA BRAVA.SLDDR W	PREMONTAJE CHAPA BATERÍAS BRAVA	1

5.2. Chassis BRAVA

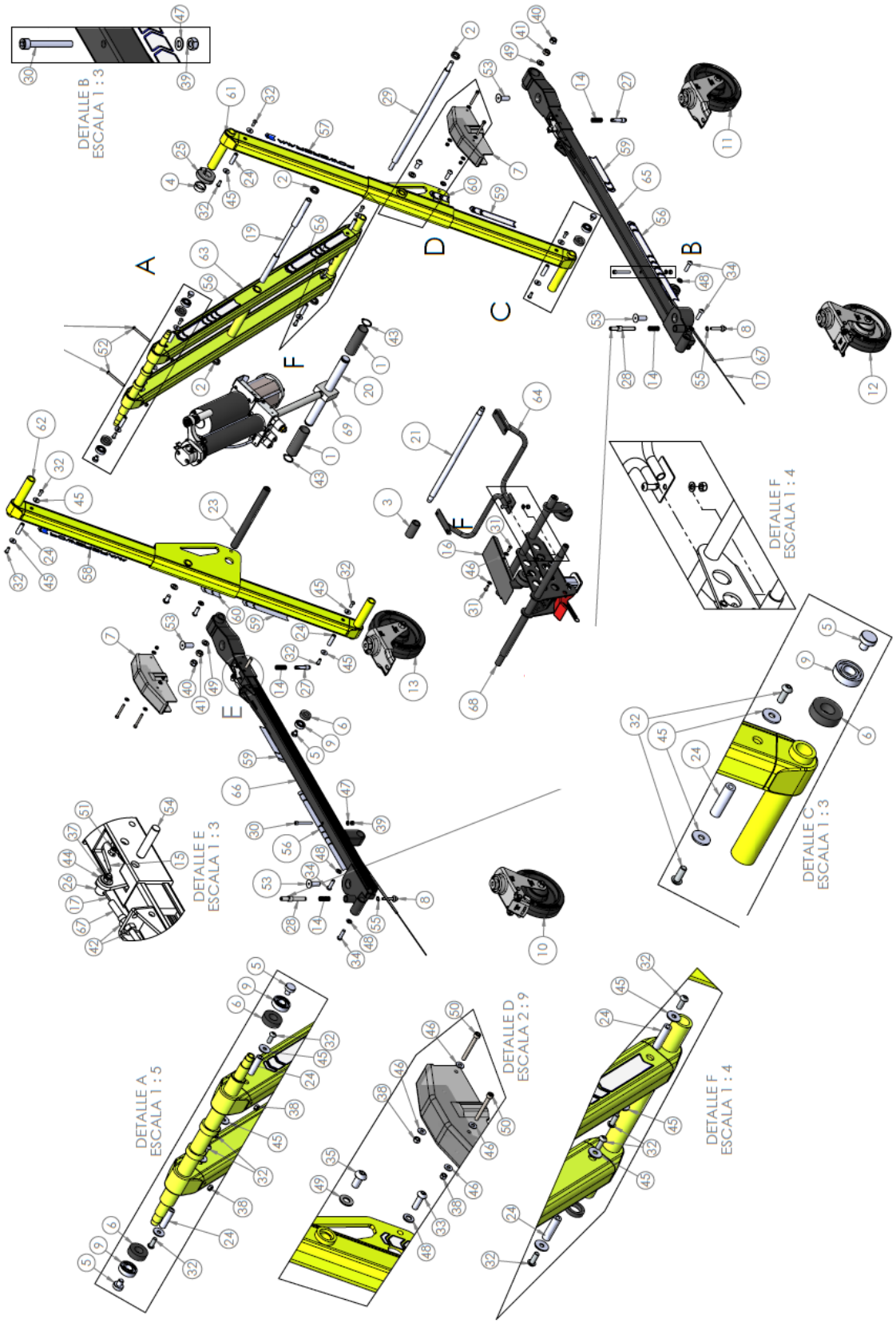

Nº	Nº DE PIEZA	Descripción	UDS
1	03-0817-001	CASQUILLO DISTANCIADOR CILINDRO BRAVA	2
2	05-0211-001	CASQUILLO PLÁSTICO EJE PATAS BRAVA	4
3	05-0212-001	CASQUILLO LARGO INF. EJE PATAS BRAVA	1
4	05-0236-001	SEPARADOR LEVA BRAVA	1
5	05-0293-001	TAPON PROTECCION DESGASTE GUIA	4
6	05-0409-002	CASQUILLO DIST. EJE INFERIOR BRAVA (ant. 12-0432)	4
7	05-0501-001	TAPA FUND. HORQUILLA DELANTERA SILVER	2
8	06-0108-001	TORNILLO PRESION M6 CONTERA REF. 420208	2
9	09-0070-001	RODAMIENTO - 6001Z	4
10	09-0247-00B	RUEDA CONDUCT. FRENO LZ-POEV 161K-FI-EL-RIR-L-902886	1
11	09-0248-00B	RUEDA NO FRENO/COND. LZ-POEV 161K-RIR-RI0-L-902888	1
12	09-0249-001	RUEDA COND. FRENO LZ-POEV 161K-FI-EL-RIR-R-902887	1
13	09-0250-001	RUEDA NO FRENO/COND. LZ-POEV 161K-RIR-RI0-R-902889	1
14	09-0251-001	MUELLE TETON ø12mm GUIA CENTRAL	4
15	11-0995-001	PLETINA ACCIONAMIENTO TETON ø12mmGUIA CENTRAL	2
16	11-1408-001	TAPA CABLES 3ER PUNTO BASIC V003	1
17	11-1579-001	CABLE ACERO d1.5 L1110 CABEZA MART. RUEDAS GIR. BRAVA	2
18	12-0094-001	Terminal de cable	2
19	12-0251-002	EJE GIRO BRAVA	1
20	12-0252-001	EJE PATA CILINDRO HIDRAULICO BRAVA	1
21	12-0260-003	EJE TRASERO INFERIOR PATAS BRAVA	1
22	12-0333-002	TOPE 2 PARA FUNDA CABLE	2
23	12-0336-003	EJE GANCHOS BRAVA	1
24	12-0401-001	CASQUILLO 10X6X36 REFUERZO ESTRUCTURA BRAVA	8
25	12-0279-002	LEVA BLOQUEO ALTURA BRAVA	1
26	12-0765-001	BULON CABLE HORQUILLA DELANTERA BASIC V003	2
27	12-0766-001	TETON BLOQUEO HORQUILLA DELANTERA BASIC V003	2
28	12-0770-001	BULON PRESION AUTOBLOQUEO TRAS. BASIC V003	2
29	12-0925-001	EJE DELANTERO INFERIOR M10 BRAVA	1
30	13-0031-001	ALLEN DIN 912 M6X50 - 8.8 CINCADO	2
31	13-0097-001	ULS ISO-7381 M5x16 CINCADO	2
32	13-0102-001	ULS ISO-7381 M6x16 CINCADO	17
33	13-0114-001	ULS ISO-7381 M8x25 10.9 CINCADO	2
34	13-0115-001	ULS ISO-7381 M8x30 10.9 CINCADO	4
35	13-0125-001	ULS ISO-7381 M10x20 10.9 CINCADO	2
36	13-0174-001	TUERCA AUTOBLOCANTE M3	2
37	13-0175-001	TUERCA AUTOBLOCANTE M4	2
38	13-0176-001	TUERCA AUTOBLOCANTE M5	6
39	13-0177-001	TUERCA AUTOBLOCANTE M6	3
40	13-0179-001	TUERCA AUTOBLOCANTE M10	2
41	13-0185-001	TUERCA HEXAGONAL M10 CINCADA	2
42	13-0191-001	TUERCA HEXAGONAL M6 CINCADA	8

Nº	Nº DE PIEZA	Descripción	UDS
43	13-0199-001	ANILLO ELASTICO EXT. d 25	2
44	13-0201-001	ARANDELA ANCHA d 4 CINCADA	2
45	13-0202-001	ARANDELA ANCHA d6 CINCADA	16
46	13-0206-001	ARANDELA DIN 125-A ø5 CINCADA	10
47	13-0207-001	ARANDELA d6 CINCADA	3
48	13-0208-001	ARANDELA d8 CINCADA	6
49	13-0210-001	ARANDELA d10 CINCADA	4
50	13-0316-001	ALLEN DIN 912 M5X45 - 8.8 CINCADO	4
51	13-0342-001	ALLEN DIN 912 M3x14 - 8.8 CINCADO	2
52	13-0463-001	DIN 7380 ULS M5X60 -10.9 CINCADO	2
53	13-0493-001	TORNILLO AVELLANADO ALLEN 12X35 INOX. DIN 7991	4
54	13-0526-001	PIN DIN 7 ø4X24	2
55	13-0531-001	ANILLO ELASTICO EXT. ø 9 DIN 471	2
56	14-0162-001	ETIQUETA REFLECT. INFERIOR BANCADA Y TIJERAS	6
57	14-0163-001	ETIQUETA POWERBRAVA--> TIJERAS	1
58	14-0164-001	ETIQUETA <--POWERBRAVA TIJERAS	1
59	14-0169-001	ETIQUETA REFLECT. ZONA TIJERAS BRAVA	4
60	14-0171-001	ETIQUETA REFLECT. MACIZO CENTRO TIJERAS BRAVA	2
61	50-0361-004	PATA EXT. DCH. BRAVA	1
62	50-0362-004	PATA EXT. IZQ. BRAVA	1
63	50-0363-002	PATAS INTERIORES BRAVA	1
64	50-0711-001	TUBOS CURVADOS SOLD. PASACABLES BASIC V003	1
65	50-0764-003	LATERAL DEREC. CHASIS BRAVA NUEVA FUND. DELANTERA	1
66	50-0765-003	LATERAL IZQUIERDA CHASIS BRAVA NUEVA FUND. DELANTERA	1
67	52-0877-002	PREMONTAJE FUNDA CABLE BLOQUEO RUEDAS TG-1000	2
68	52-0914-001	3r PUNTO BRAVA TG1000	1
69	52-0915-001	MOTOR BRAVA TG1000	1

5.3 Doble leg brace BRAVA

N.º	Referencia	Descripción	CANT.
1	09-0091-001	AMOR.PIER.WO/D2/P/KO/1/45/200/150	2
2	09-0092-001	CABEZA DISPARO AMOR. LA-ST M8X1	2
3	09-0100-001	AMOR.PIERNAZAL FUEGO 006377 200N	1
4	09-0105-001	TUERCA PALANCA 1041BN AMORT. 012491	1
5	09-0107-001	CABEZA DISPARO AMOR. LA-ST M10X1	1
6	09-0241-001	PULSADOR ROJO AMORT. BRAVA Long. FUNDA 340mm	1
7	11-0594-003	SOPORTE PULSADOR PIERNAZAL DOBLE BRAVA	1
8	12-0176-001	CLAMP BUSHING FOR PUSH-BUTTON FUEGO	1
9	12-0185-001	tuerca especial M16x1	1
10	12-0254-001	MACIZO HEMBRA BISAGRA CABEZAL BRAVA	2
11	12-0256-001	TERMINAL ALUMINIO TUBO ARTICULADO BRAVA	2
12	12-0316-001	CASQUILLO ARTICULACION PIERNAZAL BRAVA	2
13	12-0372-001	PASADOR EJE CILINDRO PIERNAZAL BRAVA	1
14	12-0373-002	PASADOR EJE CILINDRO PIERNAZAL BRAVA	1
15	12-0385-001	TERMINAL ALUMINIO TUBO ARTICULADO BRAVA	2
16	13-0024-001	ALLEN DIN 912 M6X20 - 8.8 CINCADO	2
17	13-0107-001	DIN 7380 ULS M6x40 -10.9 CINCADO	2
18	13-0176-001	TUERCA AUTOBLOCANTE M5	8
19	13-0177-001	TUERCA AUTOBLOCANTE M6	4
20	13-0196-001	ANILLO ELASTICO d 8	2
21	13-0206-001	ARANDELA d5 CINCADA	16
22	13-0207-001	ARANDELA d6 CINCADA	4
23	13-0220-001	ARANDELA NYLON d.6	4
24	13-0221-001	ARANDELA NYLON d.8 GORDA	3
25	13-0240-001	DIN 7380 ULS M5X35 -10.9 CINCADO	6
26	13-0302-001	DIN 7380 ULS M5X25 -10.9 CINCADO	2
27	13-0483-001	ARANDELA d 16 CINCADA	1
28	50-0436-003	PIERNAZAL LARGO BRAVA	1
29	50-0437-002	PIERNAZAL CORTO BRAVA	1

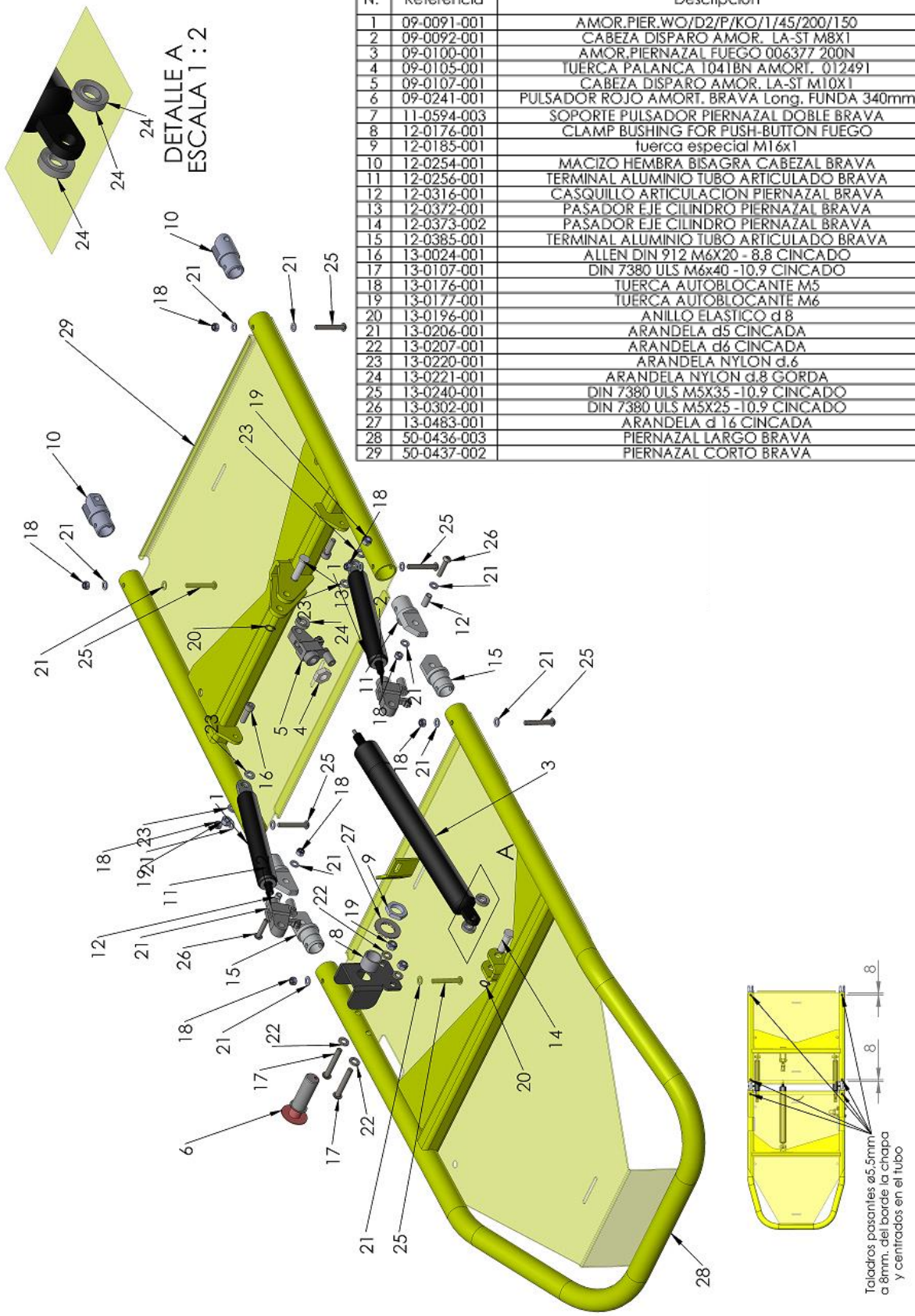

5.4. Head complete pre-assembly BRAVA

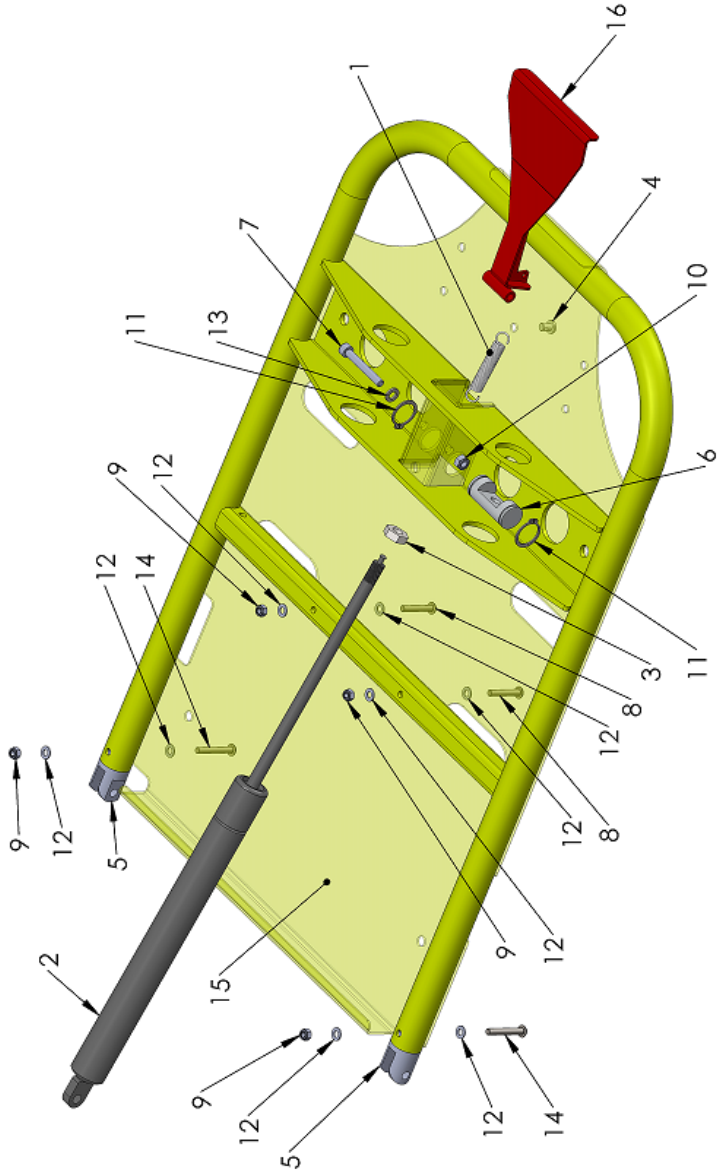

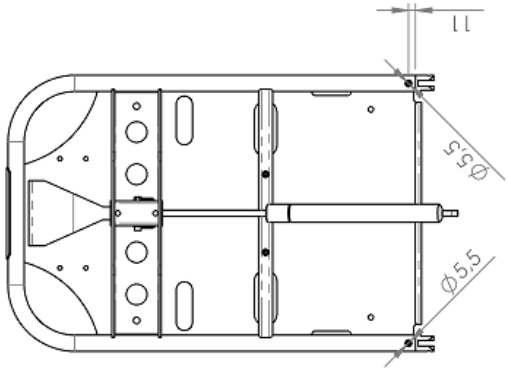

N.°	Referencia	Descripción	CANT.
1	09-0060-001	MUELLE ACCIONADOR GANCHO CENTRAL R-450	1
2	09-0098-001	AMOR.CABEZAL BRAVA 729779 400N	1
3	09-0105-001	TUERCA PALANCA 1041BN AMORT. 012491	1
4	12-0159-001	CASQUILLO AGARRE CABLE R-450 N	1
5	12-0254-001	MACIZO HEMBRA BISAGRA CABEZAL BRAVA	2
6	12-0441-001	PIEZA MECANICA TERMINAL AMORT.	1
7	13-0030-001	ALLEN DIN 912 M6X45 - 8.8 CINCADO	1
8	13-0099-001	DIN 7380 ULS M5X30 -10.9 CINCADO	2
9	13-0176-001	TUERCA AUTOBLOCANTE M5	4
10	13-0177-001	TUERCA AUTOBLOCANTE M6	1
11	13-0198-001	EXT. ELASTIC RING ø 20	2
12	13-0206-001	ARANDELA d5 CINCADA	8
13	13-0207-001	ARANDELA d6 CINCADA	1
14	13-0240-001	DIN 7380 ULS M5X35 -10.9 CINCADO	2
15	50-0376-007	CABEZAL SOLDADO BRAVA	1
16	50-5490-001	PALANCA MANETA CABEZAL SOLDADA 120	1

6. ACCESORIES BRAVA (TG-1000)

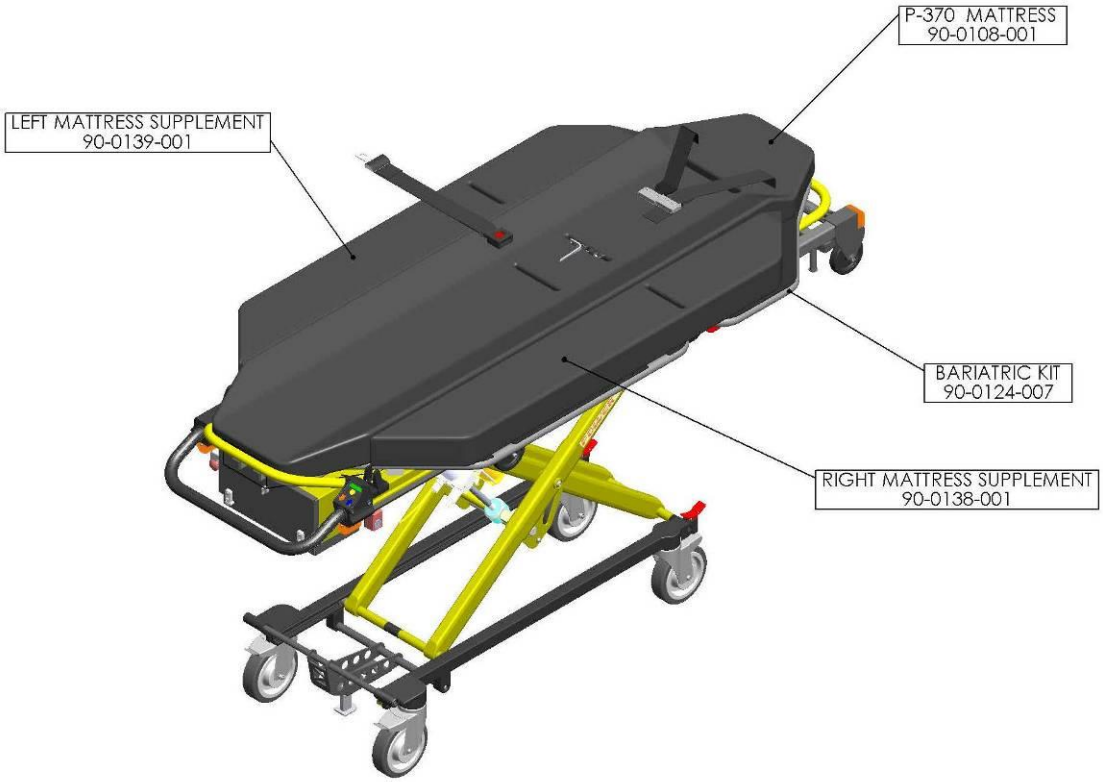

Technical Service

sat@kartsana.com

C/ Narcís Monturiol, 34
08192 Sant Quirze del Vallès
BARCELONA
TEL. +34 93 715-86-72
info@kartsana.com
www.kartsana.com